ESW 7670

Handleless Gourmet warming drawer, 30" width and 9 3/16" height for preheating dishware, keeping food warm, and Slow Roasting.

- The ultimate in enjoyment – Slow Roasting
- Always at the right temperature – 4 operating modes
- Convenient and easy – Touch control and Miele@home
- Push2open – opening the drawer couldn't be easier
- Better safe than sorry – timer with automatic switch-off

EAN: 4002516487258 / Material number: 11794820 / Old Material Number: 30767030USA

Construction type and design	
Gourmet drawer	•
VitroLine	•
ArtLine	•
No Handles	•
Color	Graphite grey
Operating modes	
Warm cups	•
Warm plates	•
Keeping food warm	•
Slow roast	•
User convenience	
Miele@home	•
Push2open mechanism	•
Fully telescopic runners for easy loading and unloading	•
Control panel with sensor control	•
Control panel with text	•
Stop programming	•
Timer function	•
Sabbath program	•
Cleaning convenience	
Flush control panel	•
Safety	
Cool front	•
Anti-slip mat	•
Safety cut-out	•
Accessory drawer	
Capacity	12 place settings
Technical data	
Temperature in °F (°C)	105-185 (40-85)
Appliance width in in. (mm)	29 7/8 (757)
Appliance height in in. (mm)	9 7/8 (248)
Appliance depth in in. (mm)	24 (608)
Useable interior height in in. (mm)	6 3/4 (170)
Total connected load in kW	1.00
Voltage in V	120
Frequency in Hz	60
Fuse rating in A	16
Number of phases	1
Connection wire with plug	•
Wire length in ft. (m)	6 (2.0)
Accessories supplied	
Non-slip liner	1
Rack for increased capacity	1

Miele

ESW 7670

Handleless Gourmet warming drawer, 30" width and 9 3/16" height for preheating dishware, keeping food warm, and Slow Roasting.

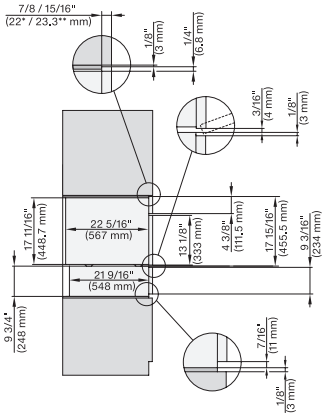

DGC 6x00-1, + EBA 6808, ESW 6x85, DGC 7xxx, EBA 7848, ESW 7x70, EVS 7670 Combi, Installation drawing, Flush inset, NA

7/8“ – 22* mm – Glas, 15/16“ – 23.3** mm – Edelstahl

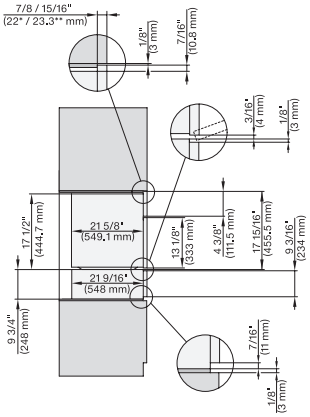

H 6x00 BM + EBA 6808, ESW 6x85, H 7xxx, ESW7x70, EBA7848 EVS 7670 Combi, Installation drawing, Flush inset, NA

7/8“ – 22* mm – Glas, 15/16“ – 23.3** mm – Edelstahl

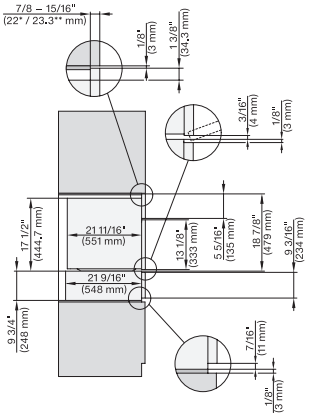

H 6x70 BM, ESW 6x85, H7x70, ESW 7x70, EVS 7670 Combi, Installation drawing, Flush inset, NA

7/8“ – 22* mm – Glas, 15/16“ – 23.3** mm – Edelstahl

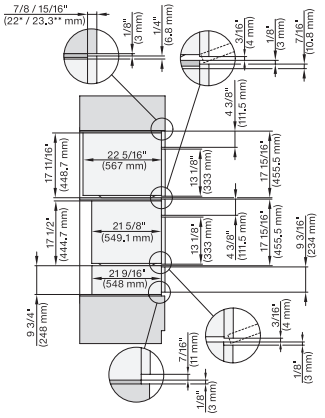

DGC 6x00-1+EBA 6808, H6x00 BM+EBA6808, ESW6x85, DGC7xxx, EBA7848, ESW7x70, EVS7670 Combi, Install draw, Flush inset, NA

7/8“ – 22* mm – Glas, 15/16“ – 23.3** mm – Edelstahl

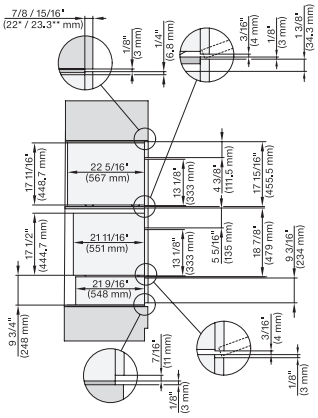

DGC 6x00-1+EBA 6808, H6x70, ESW6x85, DGC7xxx, EBA7848, H7xxx, ESW7x70, EVS7670 Combi, Install. drawing, Flush inset, NA

7/8“ – 22* mm – Glas, 15/16“ – 23.3** mm – Edelstahl

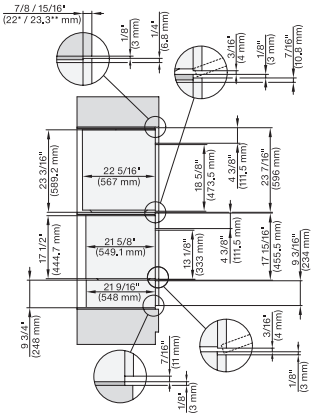

DGC 6x6x (AM)+EBA 6808, H 6x00, ESW 6x85,DGC 7xxx, EBA7868, H7x40, ESW7x70, ESV7670 Combi, Install draw, Flush inset, NA

7/8“ – 22* mm – Glas, 15/16“ – 23.3** mm – Edelstahl

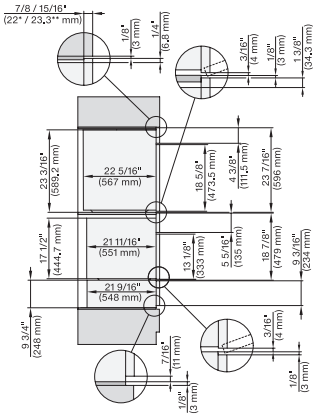

DGC 6x6x (AM)+EBA 6808, H 6x70 BM, ESW 6x85, DGC786x, EBA7868, H 7x70, Exx7x70, Combi, Install drawing, Flush inset, NA

7/8“ – 22* mm – Glas, 15/16“ – 23.3** mm – Edelstahl

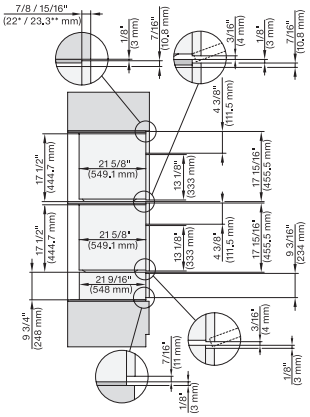

H 6x00 BM + EBA 6808, ESW 6x85, H 7x40, EBA 7848, Exx 7x70 Combi, Installation drawing, Flush inset, NA

7/8“ – 22* mm – Glas, 15/16“ – 23.3** mm – Edelstahl

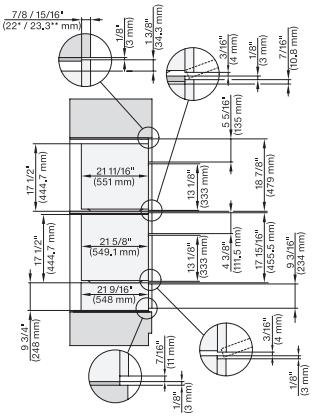

H 6x70 BM, H 6x00 BM + EBA 6808, ESW 6x85, DGC7x7x, EBA7848, H7xxx, ESW7x70 Combi, Installation drawing, Flush inset, NA

7/8“ – 22* mm – Glas, 15/16“ – 23.3** mm – Edelstahl

ESW 7670

Handleless Gourmet warming drawer, 30" width and 9 3/16" height for preheating dishware, keeping food warm, and Slow Roasting.

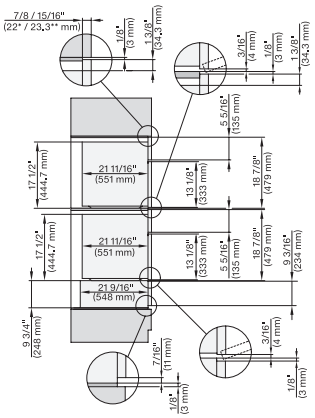

H 6x70 BM, ESW 6x85, DGC7xxx, H7x7x, ESW 7x70 Combi, Installation drawing, Flush inset, Flush inset, NA

7/8“ – 22* mm – Glas, 15/16“ – 23.3** mm – Edelstahl

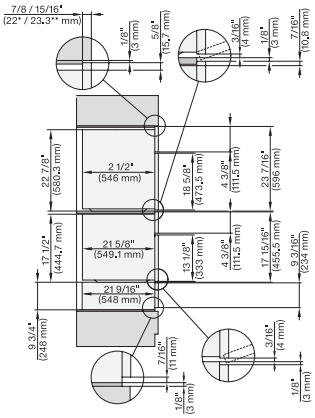

H 6560 B, H 6x60, H6x00+EBA 6808; ESW 6x85, H7xxx, EBA78x8, Exx7x70, Combi, Install draw, Flush inset, Flush inset, NA

7/8“ – 22* mm – Glas, 15/16“ – 23.3** mm – Edelstahl

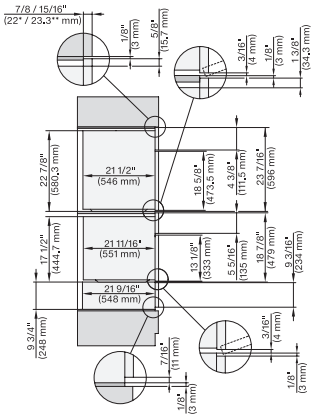

(H 6560, H 6x60)+EBA 6808; H 6x70 BM, ESW 6x85, H7xxx, EBA7868, Exx7x70, Combi, Installation drawing, Flush inset, NA

7/8“ – 22* mm – Glas, 15/16“ – 23.3** mm – Edelstahl

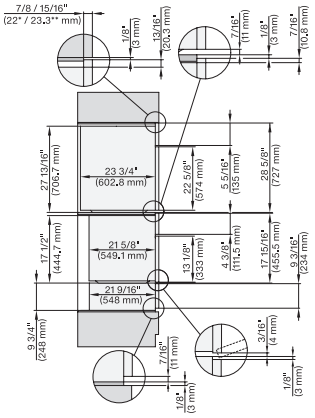

H 6x80 BP, H 6x00 BM+EBA6808, ESW 6x85, H 6x80-2BP, H7xxx, EBA7868, Exx7x70 Combi, Installation drawing, Flush inset, NA

7/8“ – 22* mm – Glas, 15/16“ – 23.3** mm – Edelstahl

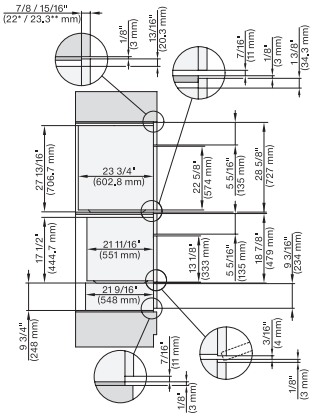

H 6x80 BP, H 6x70 BM, ESW 6x85, H 6x80-2BP, H7xxx, ESW 7x70, EVS7670 Combi, Installation drawing, Flush inset, NA

7/8“ – 22* mm – Glas, 15/16“ – 23.3** mm – Edelstahl

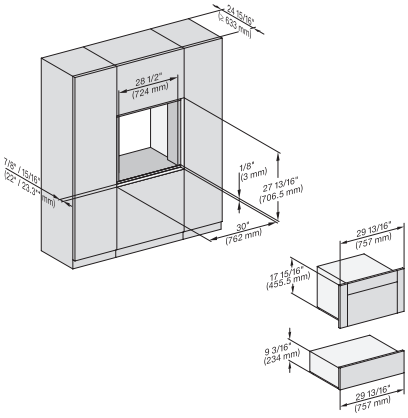

H 6x00 BM + EBA 6808, ESW 6x85, DGC 6x00-1 + EBA 6808, DGC7xxx, EBA7848, H7xxx, Exx7x70 Install drawing, Flush inset, NA

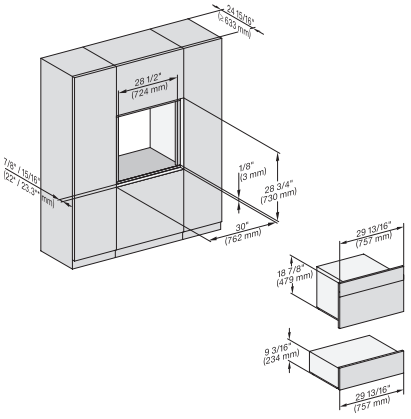

H 6x70 BM, ESW 6x85, DGC7x7x, H7x7x, Exx7x70 Fitting Combi, Installation drawing, Flush inset, NA

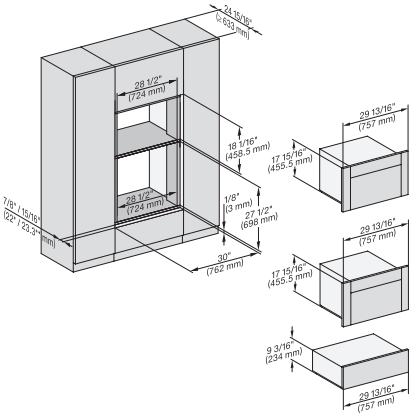

H 6x00+EBA6808, ESW 6x85, DGC 6x00-1, DGC7x4x, EBA7848, H7x80, Exx7x70 Fitting Combi, Install drawing, Flush inset, NA

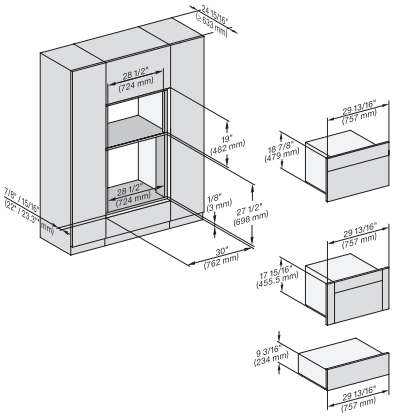

H 6x70, H 6x00+EBA6808, ESW6x85, DGC6x00-1, H7xxx, EBA7848, Exx7x70, Fitting Combi, Install drawing, Flush inset, NA

ESW 7670

Handleless Gourmet warming drawer, 30" width and 9 3/16" height for preheating dishware, keeping food warm, and Slow Roasting.

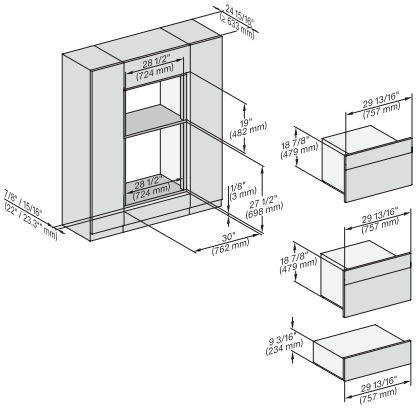

H 6x70 BM, ESW 6x85, H7x70, ESW 7x70, EVS7670 Fitting Combi, Installation drawing, Flush inset, NA

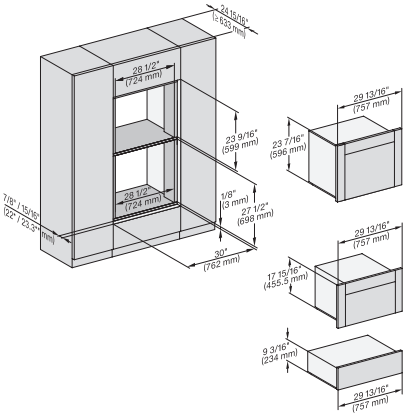

H 6x60, H 6x00, DGC686x, EBA6808; DGC 676x, ESW 6x85, DGC786x, EBA78x8, H7xxx, Exx7x70, Install draw, Flush inset, NA

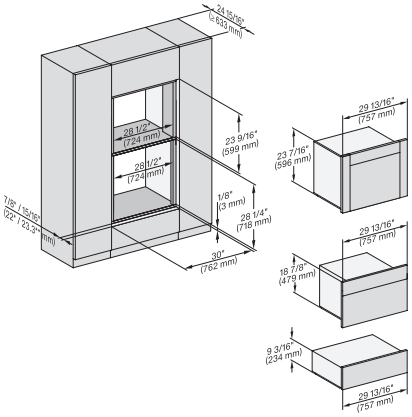

H 6x60 B/BP, DGC 686x AM+EBA 6808; H 6x70BM, ESW6x85, DGC 676x, DGC786x, EBA 7868, H7xxx, Exx 7x70 Install drawing, NA

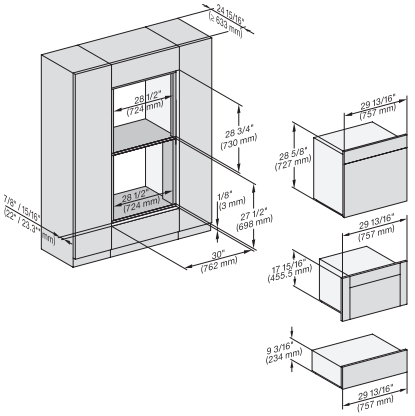

H 6x80 BP, H 6x00 BM + EBA 6808, ESW 6x85, DGC 6x00-1, H 6x80-2BP, Fitting Combi, H 7x40BM, ESW 7x70, Flush inset, NA

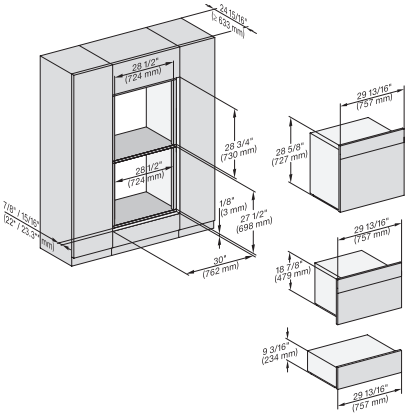

H 6x80 BP, H 6x70 BM, ESW 6x85, H 6x80-2BP, H7xxx BM/BX, H2x80BP, ESW7x70, EVS7670 Installation drawing, Flush inset, NA

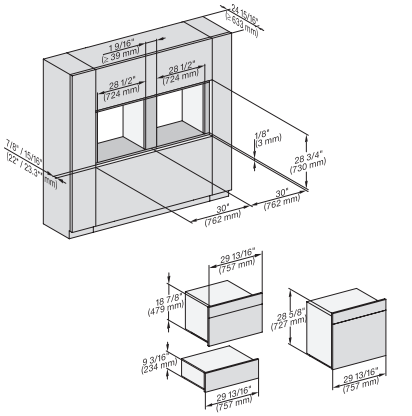

H 6x80BP, H 6x70 BM, ESW 6x85, H 6x80-2BP, H7xxx BM/BP/BPX,BMX, ESW7x70, EVS7670 , Installation drawing, Flush inset, NA

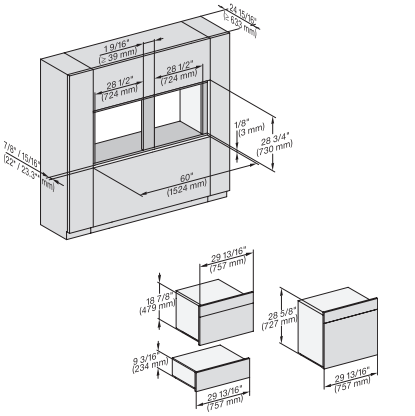

H 6x80 BP, H 6x70 BM, ESW 6x85, H 6x80-2BP, H 7xxx BP/BM/BPX/BMX, EXX 7x70 Fitting Combi side by side without wall, NA

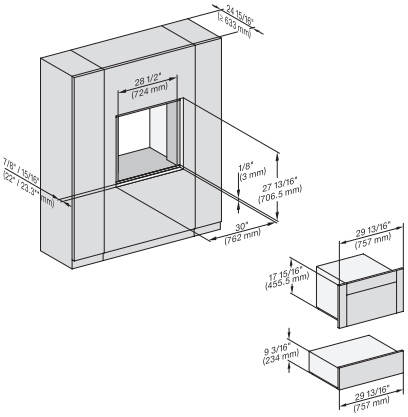

H 6x00 BM + EBA 6808, ESW 6x85, DGC 6x00-1, DGC7xxx, EBA 7848, H7x40BM, Exx 7x70, Installation drawing, Flush inset, NA

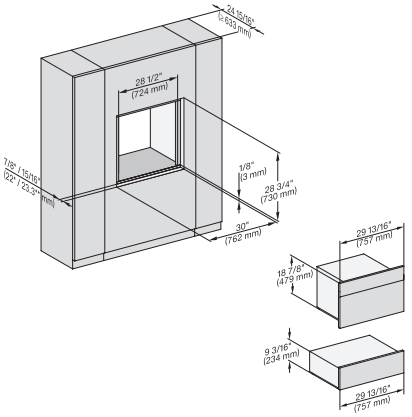

H 6x70 BM, ESW 6x85, DGC 7xxx, H7x70 BM/BMX, ESW 7x70, EVS 7670, Installation drawing, Flush inset, NA

ESW 7670

Handleless Gourmet warming drawer, 30" width and 9 3/16" height for preheating dishware, keeping food warm, and Slow Roasting.

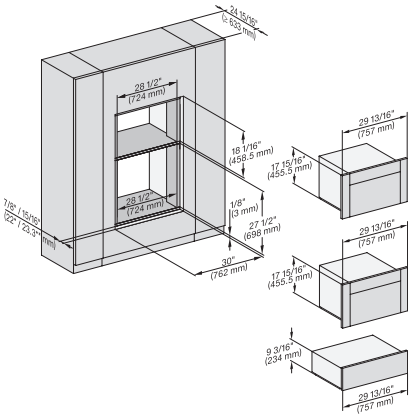

H 6x00 BM + EBA 6808, ESW 6x85, DGC 6x00-1 + EBA 6808, DGC 7x4, EBA 7848, H7x4xBM, ESW 7x70, EVS 7670, Flush inset, NA

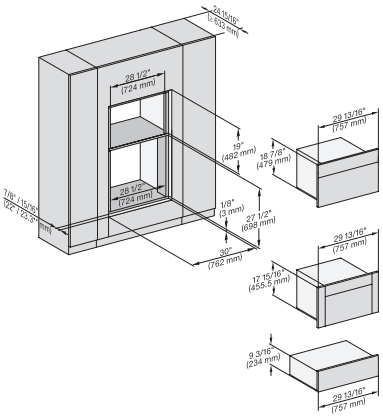

H 6x70 BM, H 6x00 BM, EBA 6808, ESW 6x85, DGC 6x00-1, H7xxx, EBA 7848, ESW 7x70, EVS 7670, Flush inset, NA

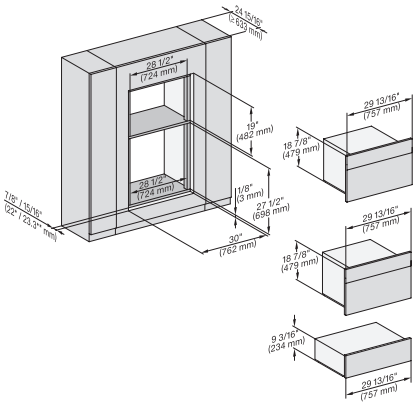

H 6x70 BM, ESW 6x85, H7x70 BM/BMX, ESW 7x70, EVS 7670 Installation drawing, Flush inset, NA

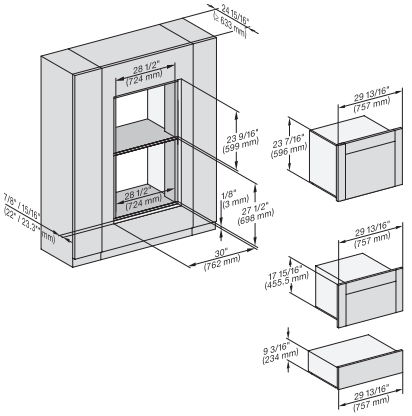

H6560B, H6x60BP, H6x0BM, DGC6xxx AM,EBA; ESW6x85, DGC676x, DGC7xxx, EBA7848, H7xxxBM/BP, ESW 7x70, EVS NA

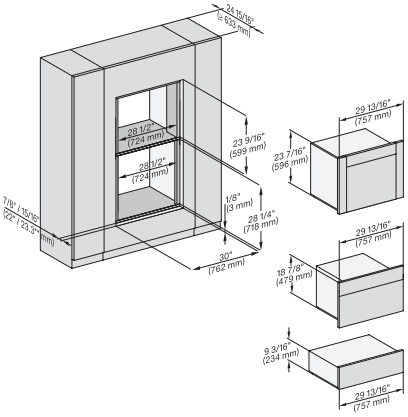

(H6560 B, H6x60 BP, H6x70 BM, DGC686x AM) + EBA6808; ESW6x85, DGC676x, DGC7xxx, EBA7868, H 7x70BM/BMX, ESW, EVS, NA

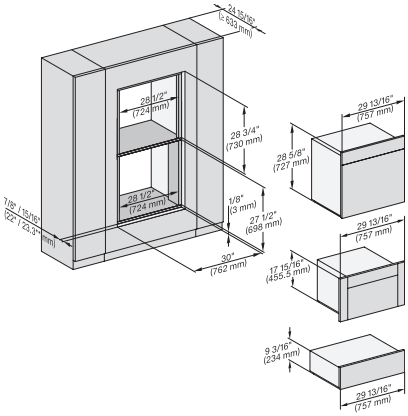

H 6x80 BP, H 6x00 BM + EBA 6808, ESW 6x85, DGC 6x00 + EBA 6808, H 6x80-2BP, H2880BP, H7xxxBM/BP/BPX, ESW7x70 NA

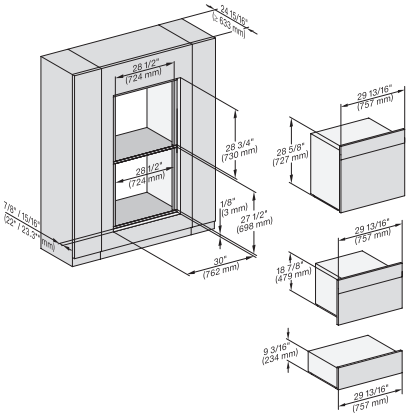

H 6x80 BP, H 6x70 BM, ESW 6x85, H 6x80-2BP, H2x80BP, H7xx0BP/BM/BPX, ESW7x70, EVS7670 Flush inset, NA

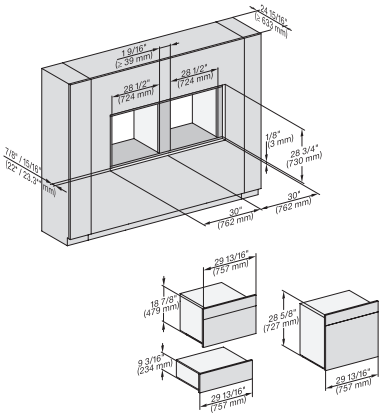

H 6x80 BP, H 6x70 BM, ESW 6x85, H 6x80-2BP, H7x70BM/BMX, ESW 7x70, EVS 7670, Installation drawing, Flush inset, NA

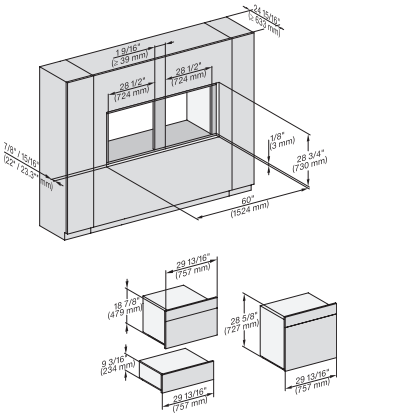

H 6x80 BP, H 6x70 BM, ESW 6x85, H 6x80-2BP, H7x80 BP/BPX/BM/BMX, EWS 7x70, EVS 7670 drawing, Flush inset, NA

ESW 7670

Handleless Gourmet warming drawer, 30" width and 9 3/16" height for preheating dishware, keeping food warm, and Slow Roasting.

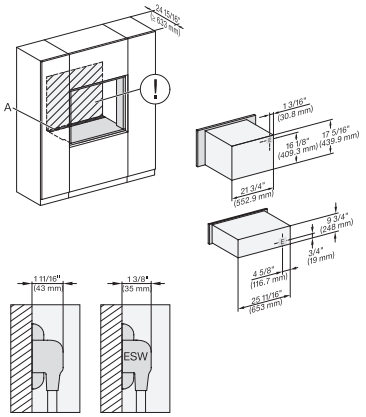

H 6x00 BM + EBA 6808, ESW 6x85, H 7x40BM + EBA 7848 Installation Combi, Installation drawing, Flush inset, NA

A – Cut-out (4" x 28" / 100 mm x 720 mm) in the bottom of the cabinet for power cord and ventilation, – Electrical and water supplies are recommended to be placed in adjacent cabinetry., Additional cabinet depth is required when placing the electrical and water supplies behind the appliance., E = Electric connection

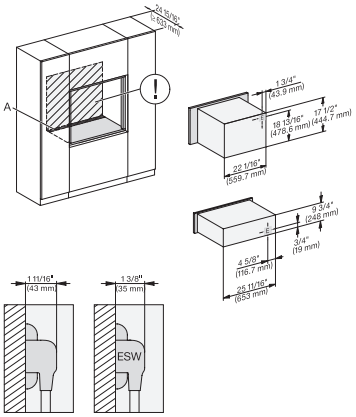

H 6x70 BM, ESW 6x85, H 7x70 BM/BMX, ESW 7x70, EVS 7670 Installation Combi, Installation drawing, Flush inset, NA

A – Cut-out (4" x 28" / 100 mm x 720 mm) in the bottom of the cabinet for power cord and ventilation, – Electrical and water supplies are recommended to be placed in adjacent cabinetry., Additional cabinet depth is required when placing the electrical and water supplies behind the appliance., E = Electric connection

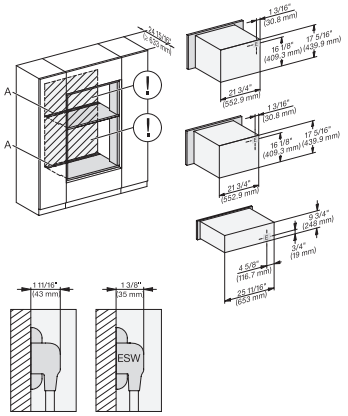

H 6x00 BM + EBA 6808, ESW 6x85, H 7x40, EBA 7848, ESW 7x70, EVS 7670 Installation drawing, Flush inset, NA

A – Cut-out (4" x 28" / 100 mm x 720 mm) in the bottom of the cabinet for power cord and ventilation, – Electrical and water supplies are recommended to be placed in adjacent cabinetry., Additional cabinet depth is required when placing the electrical and water supplies behind the appliance., E = Electric connection

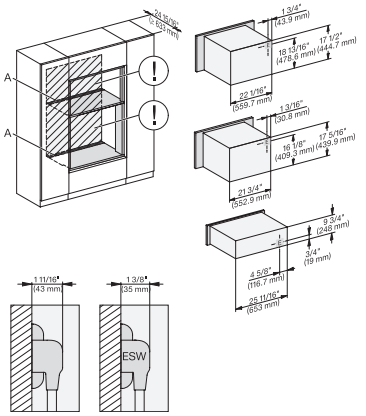

H 6x70 BM, H 6x00 BM + EBA 6808, ESW 6x85, H7xxxBM/BMX, EBA 7848, ESW7x70, EVS7670 Installation drawing, Flush inset, NA

A – Cut-out (4" x 28" / 100 mm x 720 mm) in the bottom of the cabinet for power cord and ventilation, – Electrical and water supplies are recommended to be placed in adjacent cabinetry., Additional cabinet depth is required when placing the electrical and water supplies behind the appliance., E = Electric connection

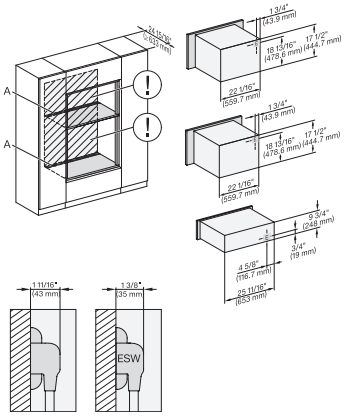

H 6x70 BM, ESW 6x85, H7x70 BM/BMX, ESW 7x70, EVS 7670 Installation Combi, Installation drawing, Flush inset, NA

A – Cut-out (4" x 28" / 100 mm x 720 mm) in the bottom of the cabinet for power cord and ventilation, – Electrical and water supplies are recommended to be placed in adjacent cabinetry., Additional cabinet depth is required when placing the electrical and water supplies behind the appliance., E = Electric connection

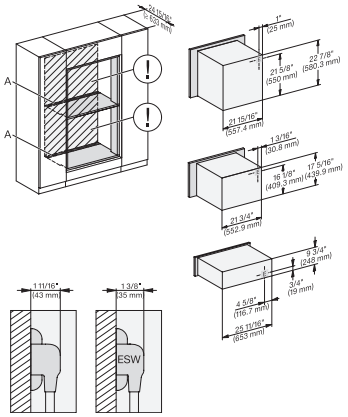

H 6560 B,EBA 6808, H 6x60 BP, H 6x00 BM, ESW 6x85, H7xxxBP/BM, EBA7848, ESW7x70, EVS7670, Flush inset, NA

A – Cut-out (4" x 28" / 100 mm x 720 mm) in the bottom of the cabinet for power cord and ventilation, – Electrical and water supplies are recommended to be placed in adjacent cabinetry., Additional cabinet depth is required when placing the electrical and water supplies behind the appliance., E = Electric connection

ESW 7670

Handleless Gourmet warming drawer, 30" width and 9 3/16" height for preheating dishware, keeping food warm, and Slow Roasting.

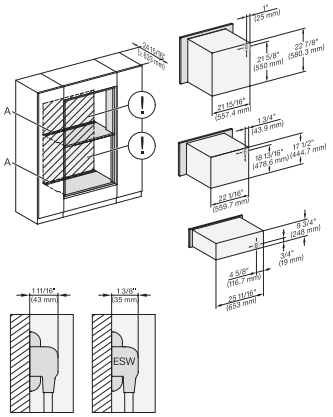

H 6x60 B/BP, EBA 6808, H 6x70 BM, ESW 6x85, H7xxxBP/BM/BMX, ESW7x70, EVS7670 Installation drawing, Flush inset, NA

A – Cut-out (4" x 28" / 100 mm x 720 mm) in the bottom of the cabinet for power cord and ventilation, – Electrical and water supplies are recommended to be placed in adjacent cabinetry., Additional cabinet depth is required when placing the electrical and water supplies behind the appliance., E = Electric connection

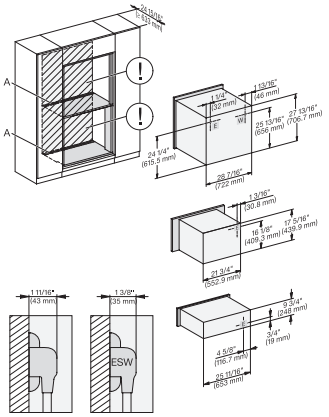

H 6x80 BP, H 6x00 BM + EBA 6808, ESW 6x85, H 6x80-2BP, H2880BP, H 7xxxBP/BPX/BM, EBA 7848, Exx7x70, Flush inset, NA

A – Cut-out (4" x 28" / 100 mm x 720 mm) in the bottom of the cabinet for power cord and ventilation, – Electrical and water supplies are recommended to be placed in adjacent cabinetry., Additional cabinet depth is required when placing the electrical and water supplies behind the appliance., E = Electric connection

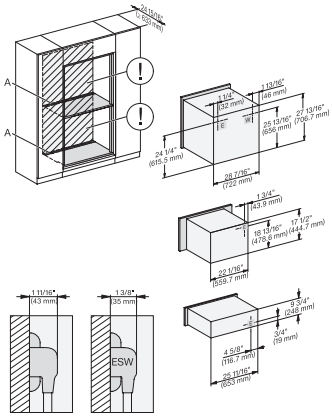

H 6x80 BP, H 6x70 BM, ESW 6x85, H 6x80-2BP, H2880BP, H7xxxBP/BPX/BM/BMX, Exx7670, Installation drawing, Flush inset, NA

A – Cut-out (4" x 28" / 100 mm x 720 mm) in the bottom of the cabinet for power cord and ventilation, – Electrical and water supplies are recommended to be placed in adjacent cabinetry., Additional cabinet depth is required when placing the electrical and water supplies behind the appliance., E = Electric connection

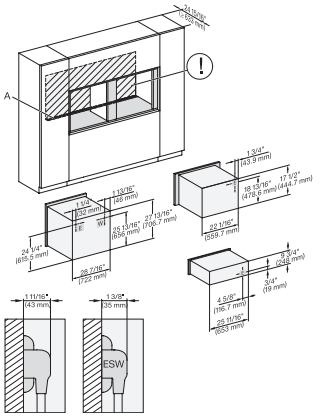

H 6x80BP, H 6x70BM, ESW 6x85, H 6x80-2BP, H2x80BP, H 7x80BP/BPX, ESW 7x70, EVS7670, Install. drawing, Flush inset, NA

A – Cut-out (4" x 28" / 100 mm x 720 mm) in the bottom of the cabinet for power cord and ventilation, – Electrical and water supplies are recommended to be placed in adjacent cabinetry., Additional cabinet depth is required when placing the electrical and water supplies behind the appliance., E = Electric connection

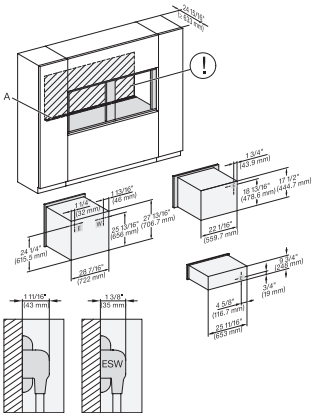

H 6x80 BP, H 6x70 BM, ESW 6x85, H 6x80-2BP, H 2x80BP, H 7x80BP/BPX, ESW 7x70, EVS 7670 , drawing, Flush inset, NA

A – Cut-out (4" x 28" / 100 mm x 720 mm) in the bottom of the cabinet for power cord and ventilation, – Electrical and water supplies are recommended to be placed in adjacent cabinetry., Additional cabinet depth is required when placing the electrical and water supplies behind the appliance., E = Electric connection

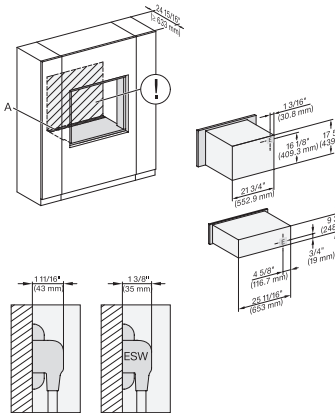

H 6x00 BM + EBA 6808, ESW 6x85, H 7x40BM, EBA 7848, ESW 7x70, EVS 7670, Installation drawing, Flush inset, NA

A – Cut-out (4" x 28" / 100 mm x 720 mm) in the bottom of the cabinet for power cord and ventilation, – Electrical and water supplies are recommended to be placed in adjacent cabinetry., Additional cabinet depth is required when placing the electrical and water supplies behind the appliance., E = Electric connection

ESW 7670

Handleless Gourmet warming drawer, 30" width and 9 3/16" height for preheating dishware, keeping food warm, and Slow Roasting.

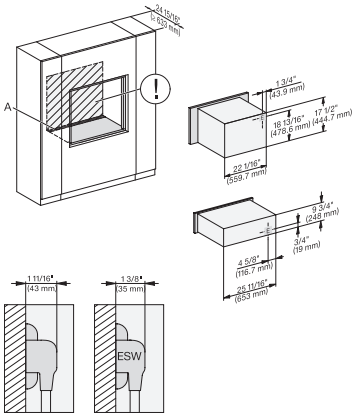

H 6x70 BM, ESW 6x85, H 7x70BM/BMX, ESW 7x70, EVS 7670, Installation drawing, Flush inset, NA

A – Cut-out (4" x 28" / 100 mm x 720 mm) in the bottom of the cabinet for power cord and ventilation, – Electrical and water supplies are recommended to be placed in adjacent cabinetry., Additional cabinet depth is required when placing the electrical and water supplies behind the appliance., E = Electric connection

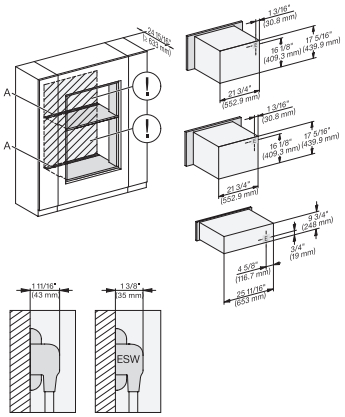

H 6x00 BM + EBA 6808, ESW 6x85, H 7x40,BM, EBA 7848, ESW 7x70, EVS 7670, Installation drawing, Flush inset, NA

A – Cut-out (4" x 28" / 100 mm x 720 mm) in the bottom of the cabinet for power cord and ventilation, – Electrical and water supplies are recommended to be placed in adjacent cabinetry., Additional cabinet depth is required when placing the electrical and water supplies behind the appliance., E = Electric connection

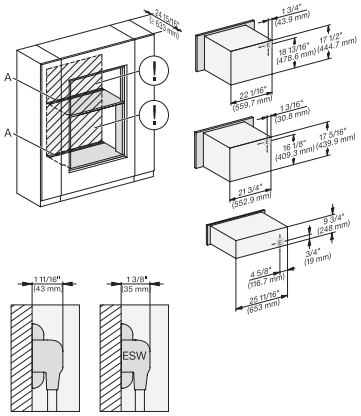

H 6x70BM, H 6x00BM,EBA 6808, ESW 6x85, H 7xxx BM/BMX, EBA 7848, ESW 7x70, EVS 7670 Installation drawing, Flush inset, NA

A – Cut-out (4" x 28" / 100 mm x 720 mm) in the bottom of the cabinet for power cord and ventilation, – Electrical and water supplies are recommended to be placed in adjacent cabinetry., Additional cabinet depth is required when placing the electrical and water supplies behind the appliance., E = Electric connection

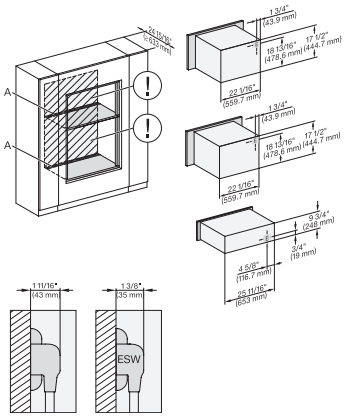

H 6x70 BM, ESW 6x85, H 7x70 BM/BMX, ESW 7x70, EVS 7670, Installation drawing, Flush inset, NA

A – Cut-out (4" x 28" / 100 mm x 720 mm) in the bottom of the cabinet for power cord and ventilation, – Electrical and water supplies are recommended to be placed in adjacent cabinetry., Additional cabinet depth is required when placing the electrical and water supplies behind the appliance., E = Electric connection

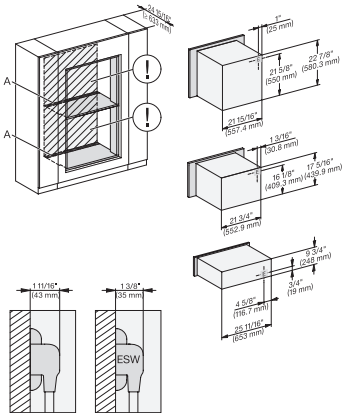

(H 6x60 B/BP, H 6x00 BM) + EBA 6808; ESW 6x85, H 7xxx BP/BM, EBA 78x8, Exx 7x70, Installation drawing, Flush inset, NA

A – Cut-out (4" x 28" / 100 mm x 720 mm) in the bottom of the cabinet for power cord and ventilation, – Electrical and water supplies are recommended to be placed in adjacent cabinetry., Additional cabinet depth is required when placing the electrical and water supplies behind the appliance., E = Electric connection

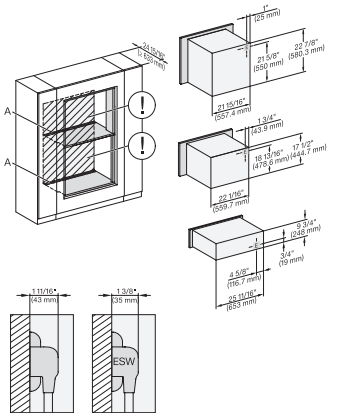

H 6560 B + EBA 6808, H 6x60 BP + EBA 6808, H 6x70 BM, ESW 6x85, H 7xxx BP/BM/BMX, EBA 7868, Exx 7x70, Flush inset, NA

A – Cut-out (4" x 28" / 100 mm x 720 mm) in the bottom of the cabinet for power cord and ventilation, – Electrical and water supplies are recommended to be placed in adjacent cabinetry., Additional cabinet depth is required when placing the electrical and water supplies behind the appliance., E = Electric connection

ESW 7670

Handleless Gourmet warming drawer, 30" width and 9 3/16" height for preheating dishware, keeping food warm, and Slow Roasting.

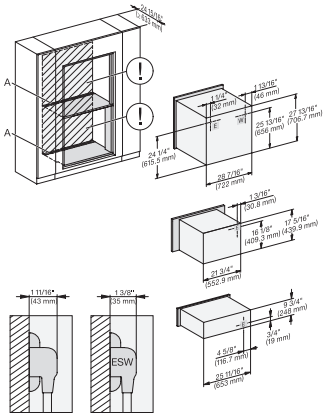

H 6x80 BP, H 6x00 BM + EBA 6808, ESW 6x85, H 6x80-2BP, H 2880BP, H 7x40BM, EBA 7848, ESW 7x70, EVS 7670, NA

A – Cut-out (4" x 28" / 100 mm x 720 mm) in the bottom of the cabinet for power cord and ventilation, – Electrical and water supplies are recommended to be placed in adjacent cabinetry., Additional cabinet depth is required when placing the electrical and water supplies behind the appliance., E = Electric connection

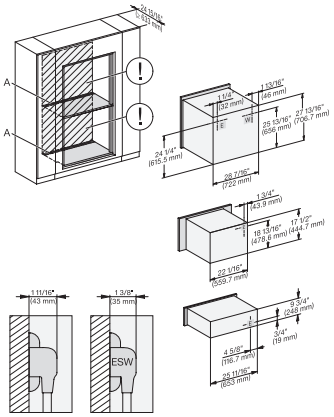

H 6x80 BP, H 6x70 BM, ESW 6x85, H 6x80-2BP, H 2880BP, H 7xxx BP/BPX/BM/BMX, Exx 7x70, Flush inset, NA

A – Cut-out (4" x 28" / 100 mm x 720 mm) in the bottom of the cabinet for power cord and ventilation, – Electrical and water supplies are recommended to be placed in adjacent cabinetry., Additional cabinet depth is required when placing the electrical and water supplies behind the appliance., E = Electric connection

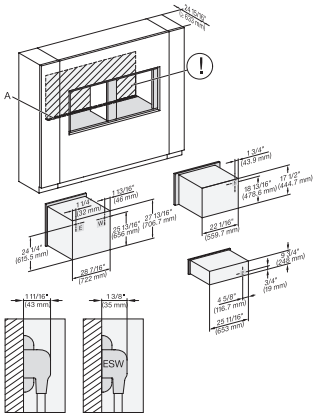

H 6x80BP, H 6x70 BM, ESW 6x85, H 6x80-2BP, H 2x80BP, H 7x80BP/BPX, ESW 7x70, EVS 7670, Install. drawing, Flush inset, NA

A – Cut-out (4" x 28" / 100 mm x 720 mm) in the bottom of the cabinet for power cord and ventilation, – Electrical and water supplies are recommended to be placed in adjacent cabinetry., Additional cabinet depth is required when placing the electrical and water supplies behind the appliance., E = Electric connection

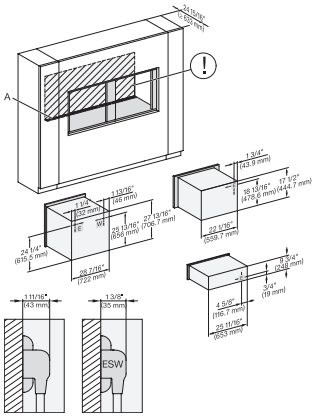

H6x80 BP, H6x70 BM, ESW6x85, H6x80-2BP, H2x80BP, H 7x80 BP/BPX, ESW 7x70, EVS 7670 , Flush inset, NA

A – Cut-out (4" x 28" / 100 mm x 720 mm) in the bottom of the cabinet for power cord and ventilation, – Electrical and water supplies are recommended to be placed in adjacent cabinetry., Additional cabinet depth is required when placing the electrical and water supplies behind the appliance., E = Electric connection

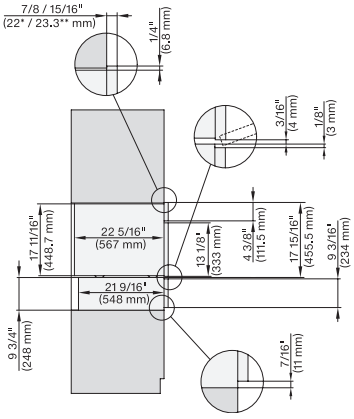

DGC 6x00-1, + EBA 6808, ESW 6x85, DGC7x4x+EBA7848, ESW7x70, EVS7670, Combi, Installation drawing, Proud, NA

7/8" – 22* mm – Glas, 15/16" – 23.3** mm – Edelstahl

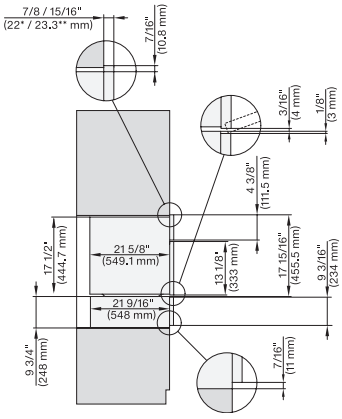

H 6x00 BM + EBA 6808, ESW 6x85, H7x40BM, ESW7x70, EVS7670, Combi, Installation drawing, Proud, NA

7/8" – 22* mm – Glas, 15/16" – 23.3** mm – Edelstahl

ESW 7670

Handleless Gourmet warming drawer, 30" width and 9 3/16" height for preheating dishware, keeping food warm, and Slow Roasting.

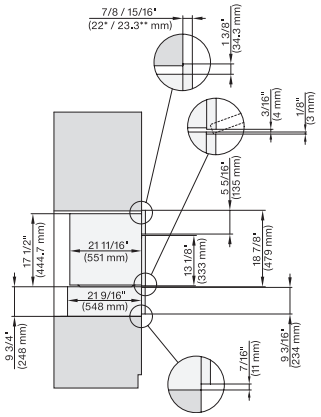

H 6x70 BM, ESW 6x85, H7x70BM(X), ESW7x70, EVS7670, Combi, Installation drawing, Proud, NA

7/8“ – 22* mm – Glas, 15/16“ – 23.3** mm – Edelstahl

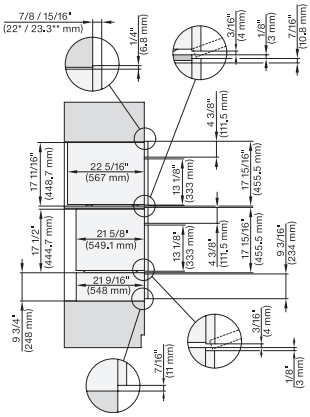

DGC6x00-1+EBA6808,H6x00BM+EBA6808,ESW6x85 ,DGC7x4x+EBA7848,H7x40BM+EBA7848,ESW7x70, Combi,Installation drawing,Proud,NA

7/8“ – 22* mm – Glas, 15/16“ – 23.3** mm – Edelstahl

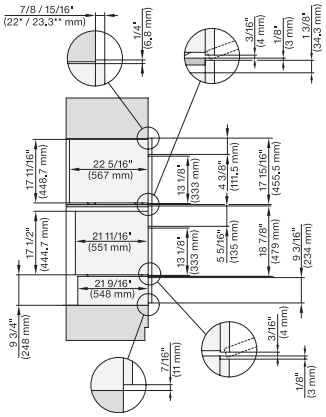

DGC6x00-1+EBA6808, H6x70BM, ESW6x85, DGC7x0+EBA7848, H7x70BM(X), ESW7x70, EVS7670, Combi, Installation drawing, Proud,NA

7/8“ – 22* mm – Glas, 15/16“ – 23.3** mm – Edelstahl

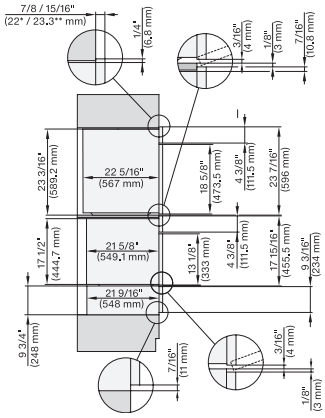

DGC6x6x, H6x00BM+EBA 6808, ESW 6x85, DGC786x, H7x40BM +EBA78x8, ESW7x70, EVS7670, Combi, Installation drawing, Proud, NA

7/8“ – 22* mm – Glas, 15/16“ – 23.3** mm – Edelstahl

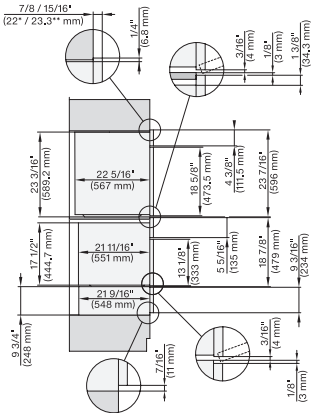

DGC6x6x+EBA6808, H6x70BM, ESW6x85, DGC786x+EBA7868, H7x70BM(X), ESW7x70, EVS7670, Combi, Installation drawing, Proud, NA

7/8“ – 22* mm – Glas, 15/16“ – 23.3** mm – Edelstahl

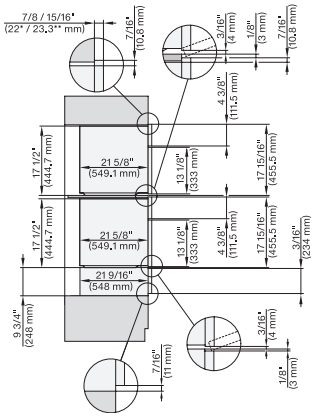

H6x0BM+EBA6808, ESW6x85, H7x40BM+EBA7848, ESW7x70, EVS7670, Combi, Installation drawing, Proud, NA

7/8“ – 22* mm – Glas, 15/16“ – 23.3** mm – Edelstahl

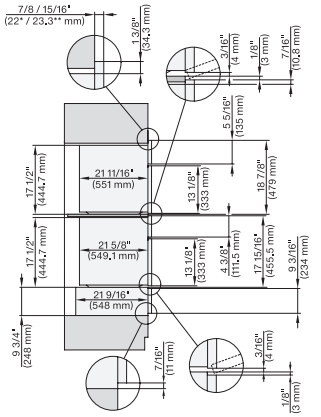

H6x70BM, H6x00BM+EBA6808, ESW6x85, DGC7x70, H7xx0BM(X)+EBA7848, ESW7x70, EVS7670, Combi, Installation drawing, Proud, NA

7/8“ – 22* mm – Glas, 15/16“ – 23.3** mm – Edelstahl

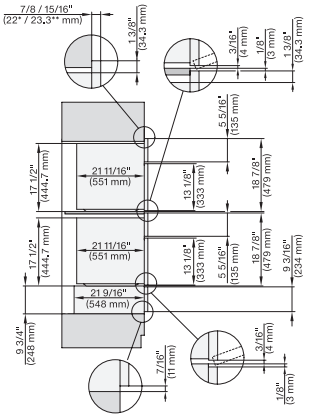

H6x70BM, ESW6x85, DGC7x7x, H7x70BM, ESW7x70, EVS7670,Combi, Installation drawing, Proud, Flush inset, NA

7/8“ – 22* mm – Glas, 15/16“ – 23.3** mm – Edelstahl

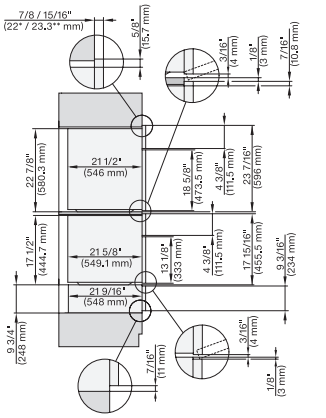

(H6x60B(P),H6x00BM)+EBA6808, ESW6x85, H7x6xBP, H7x40BM+EBA78x8, EVS7670, Combi, Installation drawing,Proud, Flush inset,

7/8“ – 22* mm – Glas, 15/16“ – 23.3** mm – Edelstahl

Miele

ESW 7670

Handleless Gourmet warming drawer, 30" width and 9 3/16" height for preheating dishware, keeping food warm, and Slow Roasting.

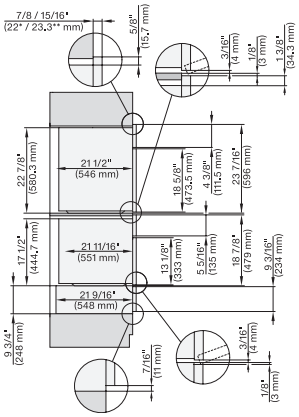

H6x60B(P)+EBA6808;H6x70BM,ESW6x85,H7x6x+EBA 7868,H7x70BM,ESW7x70,EVS7x70 Combi Installation drawing Proud Flush inset

7/8" – 22* mm – Glas, 15/16" – 23.3** mm – Edelstahl

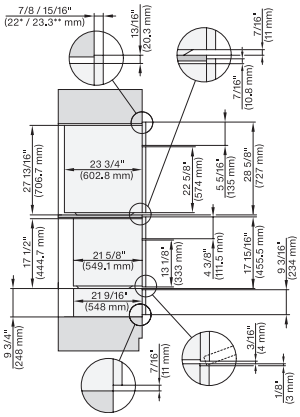

H6x80BP, H6x00BM+EBA6808, ESW6x85, H6x80-2BP, H7xx0BP+EBA 7868, ESW7x70, EVS7670, Combi, Proud, Flush inset, NA

7/8" – 22* mm – Glas, 15/16" – 23.3** mm – Edelstahl

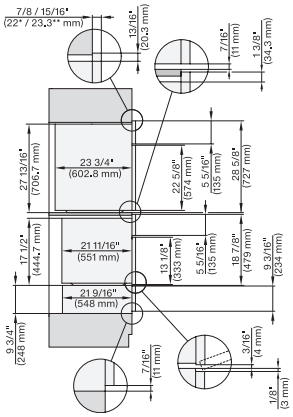

H6x80BP, H6x70BM, ESW6x85, H6x80-2BP, H7x80BP(X), H7x70BM(X), ESW7x70, EVS7670, Combi, Proud, Flush inset, NA

7/8" – 22* mm – Glas, 15/16" – 23.3** mm – Edelstahl

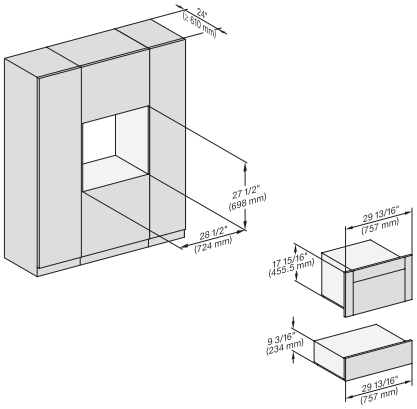

(H6x00BM, DGC6x00-1)+EBA6808, ESW6x85, (DGC7xxx,H7x40BM)+EBA7848, ESW7x70, EVS7670, Fitting Combi, Proud, NA

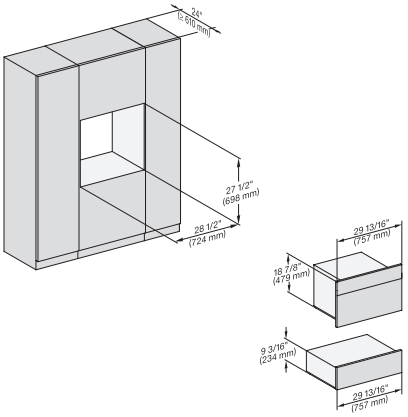

H6x70BM, ESW6x85, DGC7x7x, H7x70BMX, ESW7x70, EVS7x70, Fitting Combi, Installation drawing, Proud, NA

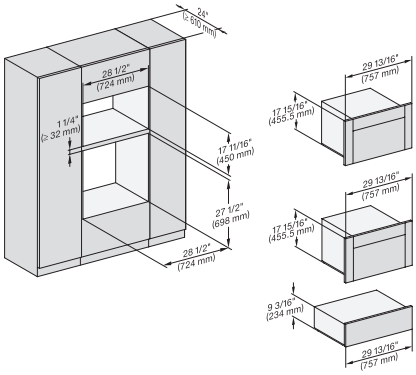

(H6x00BM,DGC6x00-1)+EBA6808, ESW6x85, (DGC7x4x, H7x40BM) + EBA7848, ESW7x70, EVS7670 Fitting Combi, Installation, Proud,

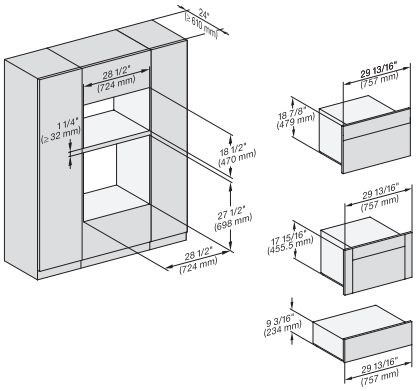

H6x70BM, (H6x00BM, DGC6x00-1)+EBA6808, ESW6x85, H7x70BM, H7x40BM+EBA7848, ESW7x70, Fitting Combi, Installation, Proud

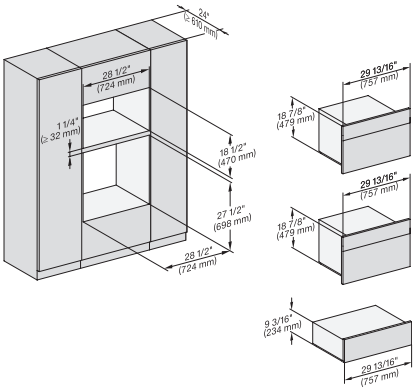

H6x70BM, ESW6x85, H7x70BM, ESW7x70, EVS7670, Fitting Combi, Installation drawing, Proud, NA

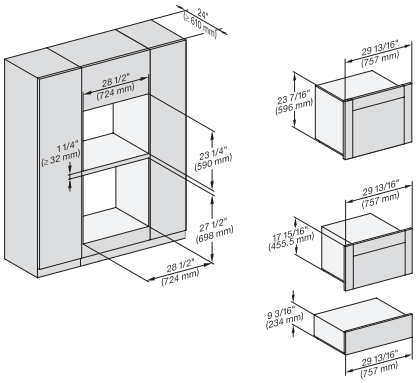

(H6560B, H6x60BP, H6x00BM, DGC686xAM) + EBA6808; DGC676x, ESW6x85, NA7000 Fitting Combi, Installation drawing, Proud, NA

ESW 7670

Handleless Gourmet warming drawer, 30" width and 9 3/16" height for preheating dishware, keeping food warm, and Slow Roasting.

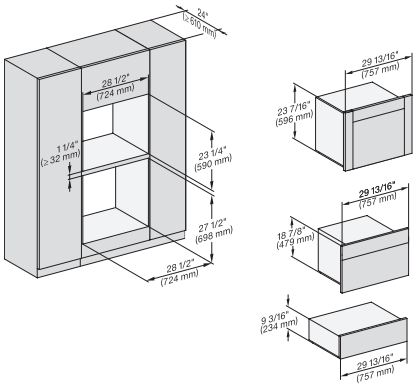

(H 6560 B, H 6x60 BP, DGC 686x AM) + EBA 6808; H 6x70 BM, ESW 6x85, NA7000, Fitting Combi, Installation drawing, Proud

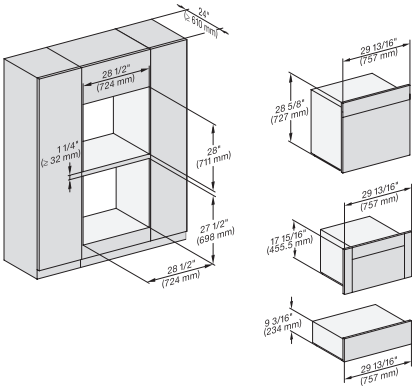

H6x80BP, H6x00BM+EBA6808, ESW6x85, DGC6x00-1 + EBA6808, H6x80-2BP, NA7000 Fitting Combi, Installation drawing, Proud, NA

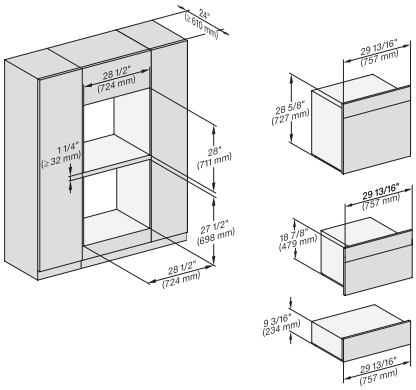

H6x80BP, H6x70BM, ESW 6x85, H 6x80-2BP, NA7000, Fitting Combi, Installation drawing, Proud, NA

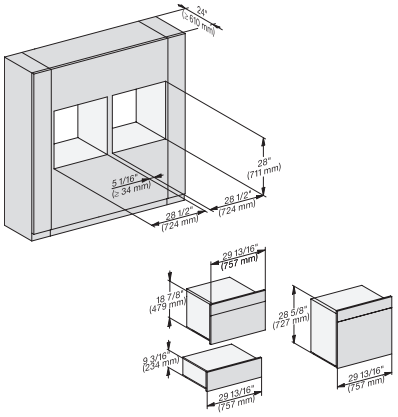

H 6x80 BP, H 6x70 BM, ESW 6x85, H 6x80-2BP, NA7000, Fitting Combi side by side, Installation drawing, Proud, NA

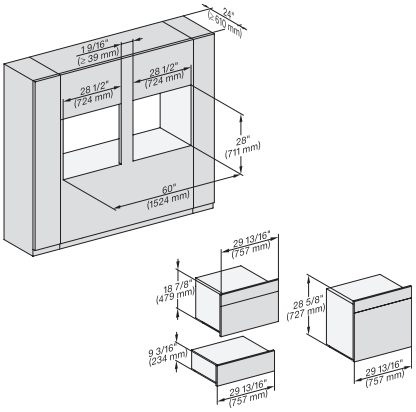

H6x80BP, H6x70BM, ESW6x85, H6x80-2BP, NA7000, Fitting Combi side by side without wall, Installation drawing, Proud, NA

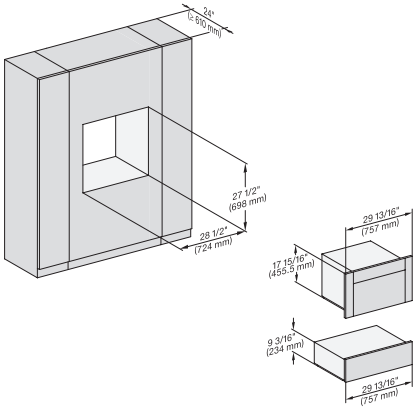

(H6x00BM, DGC6x00-1)+EBA6808, ESW6x85, (DGC7xxx, H7x40BM)+EBA7848 Fitting Combi wide front, Installation drawing, Proud,

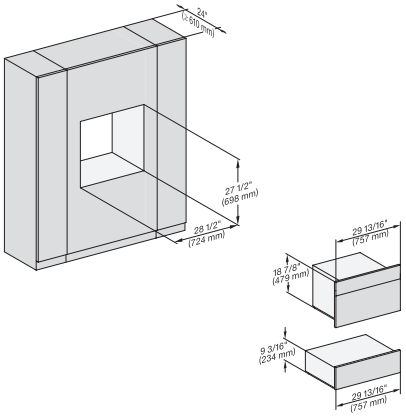

H6x70BM, ESW6x85, DGC7x7x(X), H7x70BM(X), ESW7x70, EVS7670, , Fitting Combi wide front, Installation drawing, Proud, NA

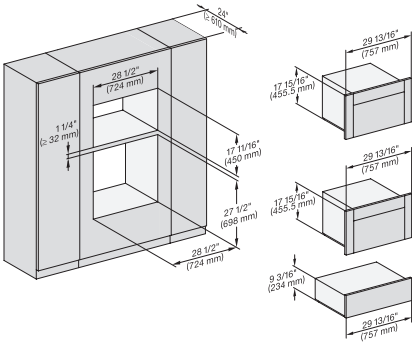

H 6x00 BM + EBA 6808, ESW 6x85, DGC 6x00-1 + EBA 6808, NA7000 Fitting Combi wide front, Installation drawing, Proud, NA

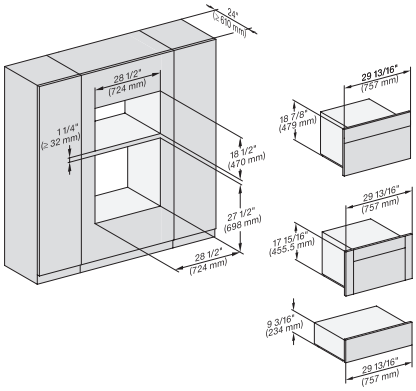

H6x70BM, H6x00BM + EBA6808, ESW6x85, DGC6x00-1 + EBA6808, NA7000 Fitting Combi wide front, Installation drawing, Proud

ESW 7670

Handleless Gourmet warming drawer, 30" width and 9 3/16" height for preheating dishware, keeping food warm, and Slow Roasting.

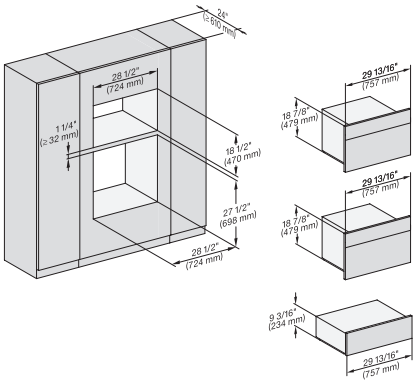

H 6x70 BM, ESW 6x85, NA7000, Fitting Combi wide front, Installation drawing, Proud, NA

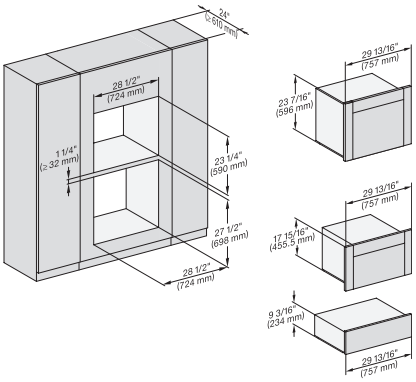

(H6560B, H6x60BP, H6x00BM, DGC6x00-1, DGC686xAM) + EBA; ESW6x85, DGC676x, NA7000 Fitting Combi w. front, drawing, Proud

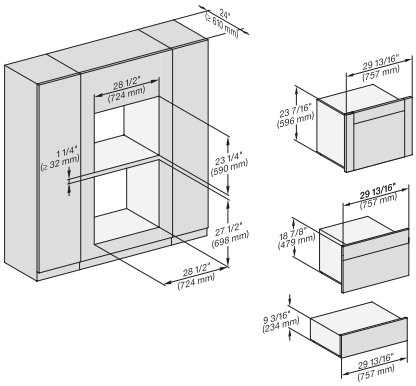

(H6560 B, H6x60 BP, H6x70 BM, DGC686x AM) + EBA6808; ESW6x85, DGC676x, NA7000, Fitting Combi w. front, drawing, Proud

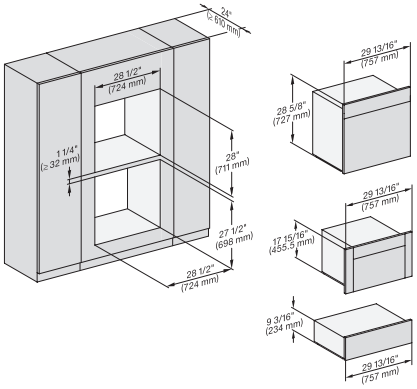

H 6x80 BP, H 6x00 BM + EBA 6808, ESW 6x85, DGC6x00 + EBA6808, H6x80-2BP, NA7000, Fitting Combi w. front, drawing, Proud

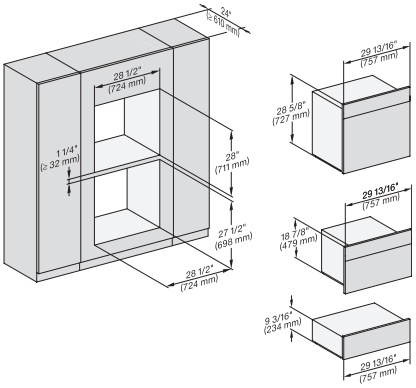

H 6x80 BP, H 6x70 BM, ESW 6x85, H 6x80-2BP, NA7000 Fitting Combi wide front, Installation drawing, Proud, NA

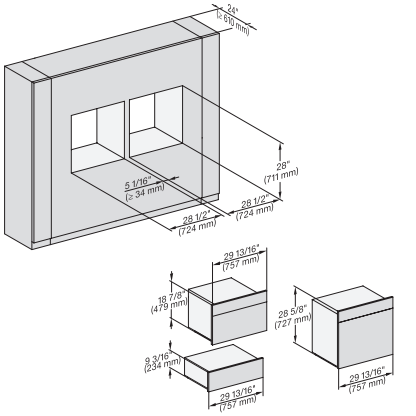

H 6x80 BP, H 6x70 BM, ESW 6x85, H 6x80-2BP, NA7000 Fitting Combi wide front side by side, Installation drawing, Proud

ESW 7670

Handleless Gourmet warming drawer, 30" width and 9 3/16" height for preheating dishware, keeping food warm, and Slow Roasting.

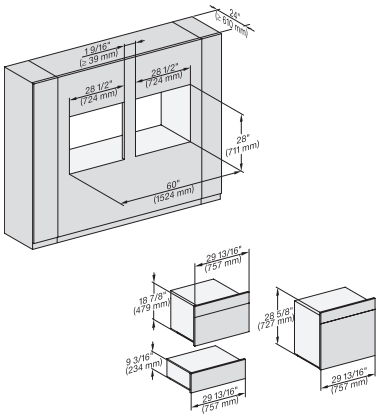

H 6x80 BP, H 6x70 BM, ESW 6x85, H 6x80-2BP, NA7000 Fitting Combi w. front side by side without wall, drawing, Proud, NA

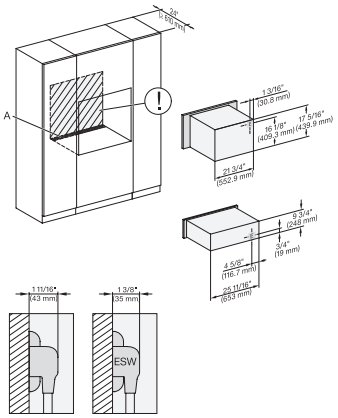

H 6x00 BM + EBA 6808, ESW 6x85, H7x40BM+EBA7848, ESW7x70, EVS7670, Installation Combi, Installation drawing, Proud, NA

A – Cut-out (4" x 28" / 100 mm x 720 mm) in the bottom of the cabinet for power cord and ventilation, – Electrical and water supplies are recommended to be placed in adjacent cabinetry., Additional cabinet depth is required when placing the electrical and water supplies behind the appliance., E = Electric connection

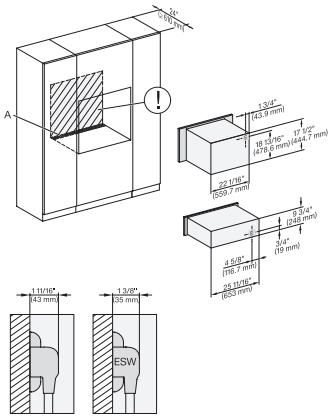

H 6x70 BM, ESW 6x85, H7x70BM(X), ESW7x70, EVS7670, Installation Combi, Installation drawing, Proud, NA

A – Cut-out (4" x 28" / 100 mm x 720 mm) in the bottom of the cabinet for power cord and ventilation, – Electrical and water supplies are recommended to be placed in adjacent cabinetry., Additional cabinet depth is required when placing the electrical and water supplies behind the appliance., E = Electric connection

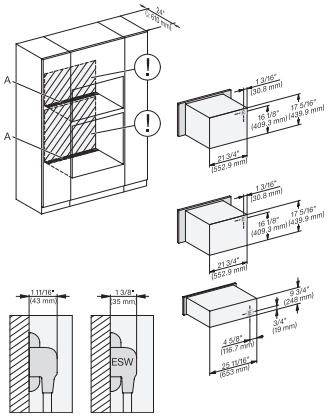

H 6x00 BM + EBA 6808, ESW 6x85, H7x40BM+EBA7848, ESW7x70, EVS7670, Installation Combi, Installation drawing, Proud, NA

A – Cut-out (4" x 28" / 100 mm x 720 mm) in the bottom of the cabinet for power cord and ventilation, – Electrical and water supplies are recommended to be placed in adjacent cabinetry., Additional cabinet depth is required when placing the electrical and water supplies behind the appliance., E = Electric connection

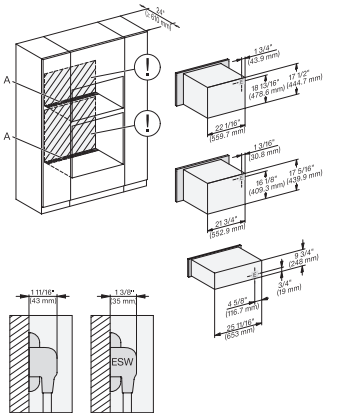

H6xx0BM+EBA6808, ESW6x85, H7xx0BM(+EBA7848), ESW7x70, EVS7x70, Installation Combi, Installation drawing, Proud, NA

A – Cut-out (4" x 28" / 100 mm x 720 mm) in the bottom of the cabinet for power cord and ventilation, – Electrical and water supplies are recommended to be placed in adjacent cabinetry., Additional cabinet depth is required when placing the electrical and water supplies behind the appliance., E = Electric connection

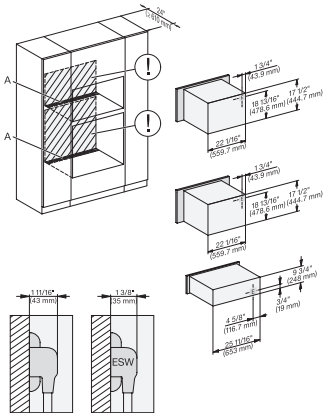

H 6x70 BM, ESW 6x85, H7x70BM, ESW7x70, EVS7670, Installation Combi, Installation drawing, Proud, NA

A – Cut-out (4" x 28" / 100 mm x 720 mm) in the bottom of the cabinet for power cord and ventilation, – Electrical and water supplies are recommended to be placed in adjacent cabinetry., Additional cabinet depth is required when placing the electrical and water supplies behind the appliance., E = Electric connection

ESW 7670

Handleless Gourmet warming drawer, 30" width and 9 3/16" height for preheating dishware, keeping food warm, and Slow Roasting.

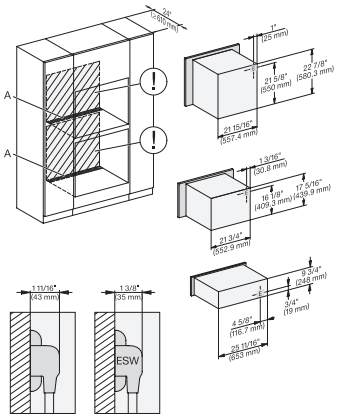

H6560B + EBA6808, H6x60BP + EBA6808, H6x00BM + EBA6808, ESW6x85, NA7000 Installation Combi, Installation drawing, Proud

A – Cut-out (4" x 28" / 100 mm x 720 mm) in the bottom of the cabinet for power cord and ventilation, – Electrical and water supplies are recommended to be placed in adjacent cabinetry., Additional cabinet depth is required when placing the electrical and water supplies behind the appliance., E = Electric connection

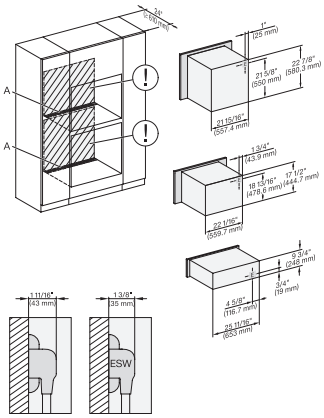

H 6560 B + EBA 6808, H 6x60 BP + EBA 6808, H 6x70BM, ESW6x85, NA7000 Installation Combi, Installation drawing, Proud, NA

A – Cut-out (4" x 28" / 100 mm x 720 mm) in the bottom of the cabinet for power cord and ventilation, – Electrical and water supplies are recommended to be placed in adjacent cabinetry., Additional cabinet depth is required when placing the electrical and water supplies behind the appliance., E = Electric connection

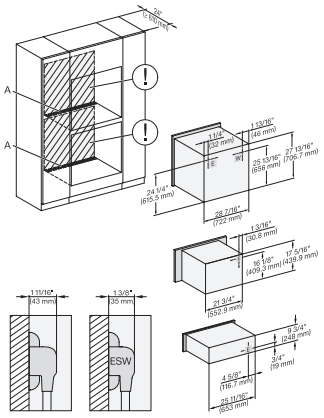

H 6x80 BP, H 6x00 BM + EBA 6808, ESW 6x85, H 6x80-2BP, NA7000 Installation Combi, Installation drawing, Proud, NA

A – Cut-out (4" x 28" / 100 mm x 720 mm) in the bottom of the cabinet for power cord and ventilation, – Electrical and water supplies are recommended to be placed in adjacent cabinetry., Additional cabinet depth is required when placing the electrical and water supplies behind the appliance., E = Electric connection

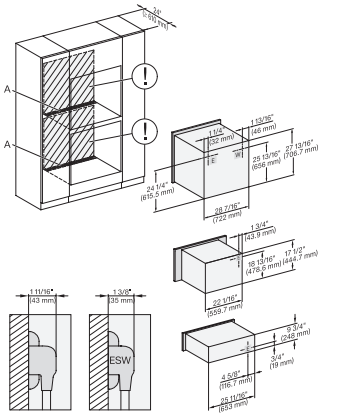

H 6x80 BP, H 6x70 BM, ESW 6x85, H 6x80-2BP, NA7000 Installation Combi, Installation drawing, Proud, NA

A – Cut-out (4" x 28" / 100 mm x 720 mm) in the bottom of the cabinet for power cord and ventilation, – Electrical and water supplies are recommended to be placed in adjacent cabinetry., Additional cabinet depth is required when placing the electrical and water supplies behind the appliance., E = Electric connection

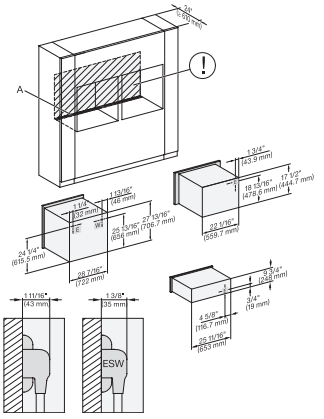

H6x80(-2)BP, H6x70BM, ESW6x85, H2x80BP, H7x80BP, ESW7x70, EVS7670, Installation Combi side by side, Installation drawing

A – Cut-out (4" x 28" / 100 mm x 720 mm) in the bottom of the cabinet for power cord and ventilation, – Electrical and water supplies are recommended to be placed in adjacent cabinetry., Additional cabinet depth is required when placing the electrical and water supplies behind the appliance., E = Electric connection

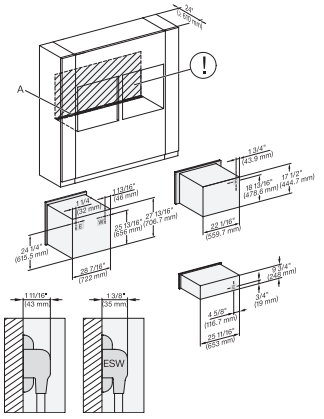

H 6x80 BP, H 6x70 BM, ESW 6x85, H 6x80-2BP, NA7000, Installation Combi side by side without wall, drawing, Proud, NA

A – Cut-out (4" x 28" / 100 mm x 720 mm) in the bottom of the cabinet for power cord and ventilation, – Electrical and water supplies are recommended to be placed in adjacent cabinetry., Additional cabinet depth is required when placing the electrical and water supplies behind the appliance., E = Electric connection

ESW 7670

Handleless Gourmet warming drawer, 30" width and 9 3/16" height for preheating dishware, keeping food warm, and Slow Roasting.

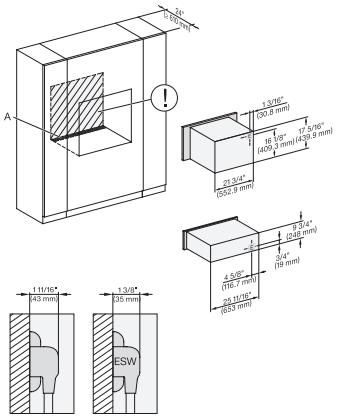

H6x00BM + EBA6808, ESW6x85, H7x40BM+EBA7848, ESW7x70, EVS7670, Installation Combi wide front, Installation drawing

A – Cut-out (4" x 28" / 100 mm x 720 mm) in the bottom of the cabinet for power cord and ventilation, – Electrical and water supplies are recommended to be placed in adjacent cabinetry., Additional cabinet depth is required when placing the electrical and water supplies behind the appliance., E = Electric connection

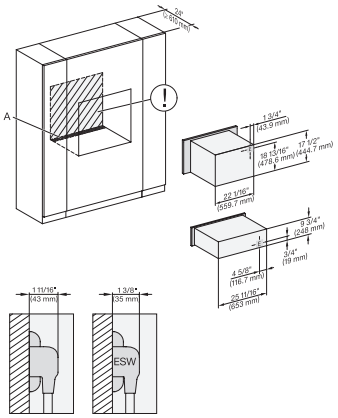

H 6x70 BM, ESW 6x85, H7x70BM(X), ESW7x70, EVS7670, Installation Combi wide front, Installation drawing, Proud, NA

A – Cut-out (4" x 28" / 100 mm x 720 mm) in the bottom of the cabinet for power cord and ventilation, – Electrical and water supplies are recommended to be placed in adjacent cabinetry., Additional cabinet depth is required when placing the electrical and water supplies behind the appliance., E = Electric connection

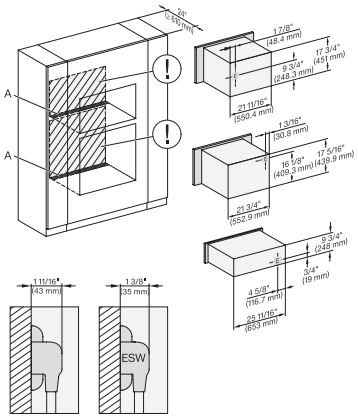

DGC 6x00-1 + EBA 6808, H 6x00 BM + EBA 6808, ESW 6x85, Installation Combi wide front, Installation drawing, Proud, NA

A – Cut-out (4" x 28" / 100 mm x 720 mm) in the bottom of the cabinet for power cord and ventilation, – Electrical and water supplies are recommended to be placed in adjacent cabinetry., Additional cabinet depth is required when placing the electrical and water supplies behind the appliance., E = Electric connection

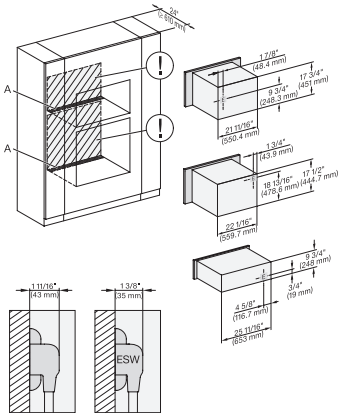

DGC 6x00-1 + EBA 6808, H 6x70 BM, ESW 6x85, Installation Combi wide front, Installation drawing, Proud, NA

A – Cut-out (4" x 28" / 100 mm x 720 mm) in the bottom of the cabinet for power cord and ventilation, – Electrical and water supplies are recommended to be placed in adjacent cabinetry., Additional cabinet depth is required when placing the electrical and water supplies behind the appliance., E = Electric connection

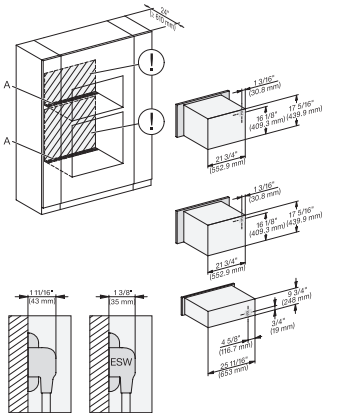

H 6x00 BM + EBA 6808, ESW 6x85, NA7000, Installation Combi wide front, Installation drawing, Proud, NA

A – Cut-out (4" x 28" / 100 mm x 720 mm) in the bottom of the cabinet for power cord and ventilation, – Electrical and water supplies are recommended to be placed in adjacent cabinetry., Additional cabinet depth is required when placing the electrical and water supplies behind the appliance., E = Electric connection

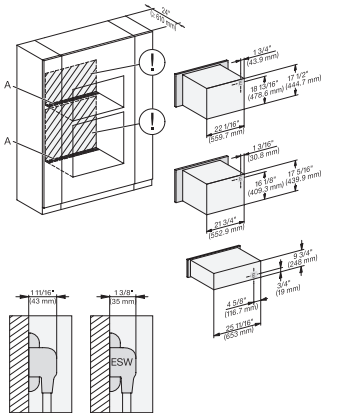

H 6x70 BM, H 6x00 BM + EBA 6808, ESW 6x85, NA7000, Installation Combi wide front, Installation drawing, Proud, NA

A – Cut-out (4" x 28" / 100 mm x 720 mm) in the bottom of the cabinet for power cord and ventilation, – Electrical and water supplies are recommended to be placed in adjacent cabinetry., Additional cabinet depth is required when placing the electrical and water supplies behind the appliance., E = Electric connection

ESW 7670

Handleless Gourmet warming drawer, 30" width and 9 3/16" height for preheating dishware, keeping food warm, and Slow Roasting.

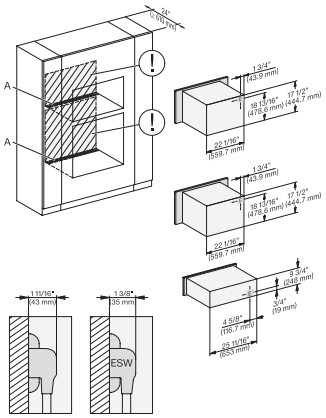

H 6x70 BM, ESW 6x85, H7x70BM, ESW7x70, EVS7670, Installation Combi wide front, Installation drawing, Proud, NA

A – Cut-out (4" x 28" / 100 mm x 720 mm) in the bottom of the cabinet for power cord and ventilation, – Electrical and water supplies are recommended to be placed in adjacent cabinetry., Additional cabinet depth is required when placing the electrical and water supplies behind the appliance., E = Electric connection

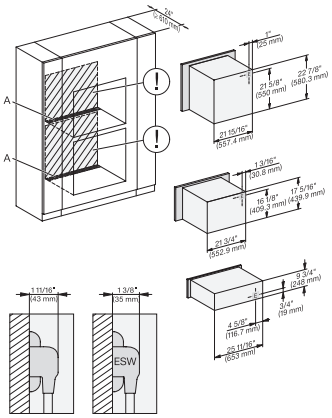

(H 6560 B, H 6x60BP, H6x00BM) + EBA6808; ESW6x85, NA7000, Installation Combi wide front, Installation drawing, Proud, NA

A – Cut-out (4" x 28" / 100 mm x 720 mm) in the bottom of the cabinet for power cord and ventilation, – Electrical and water supplies are recommended to be placed in adjacent cabinetry., Additional cabinet depth is required when placing the electrical and water supplies behind the appliance., E = Electric connection

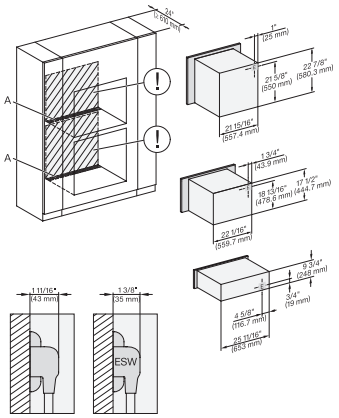

(H6560B, H6x60BP)+EBA6808, H6x70BM, ESW6x85, NA7000 Installation Combi wide front, Installation drawing, Proud, NA

A – Cut-out (4" x 28" / 100 mm x 720 mm) in the bottom of the cabinet for power cord and ventilation, – Electrical and water supplies are recommended to be placed in adjacent cabinetry., Additional cabinet depth is required when placing the electrical and water supplies behind the appliance., E = Electric connection

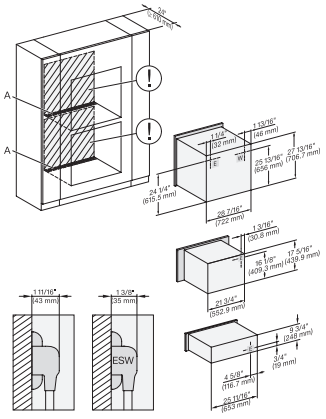

H6x80BP, H6x00BM + EBA6808, ESW6x85, H6x80-2BP, NA7000, Installation Combi wide front, Installation drawing, Proud, NA

A – Cut-out (4" x 28" / 100 mm x 720 mm) in the bottom of the cabinet for power cord and ventilation, – Electrical and water supplies are recommended to be placed in adjacent cabinetry., Additional cabinet depth is required when placing the electrical and water supplies behind the appliance., E = Electric connection

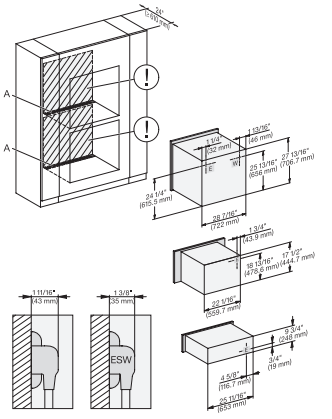

H 6x80 BP, H 6x70 BM, ESW 6x85, H 6x80-2BP, NA7000, Installation Combi wide front, Installation drawing, Proud, NA

A – Cut-out (4" x 28" / 100 mm x 720 mm) in the bottom of the cabinet for power cord and ventilation, – Electrical and water supplies are recommended to be placed in adjacent cabinetry., Additional cabinet depth is required when placing the electrical and water supplies behind the appliance., E = Electric connection

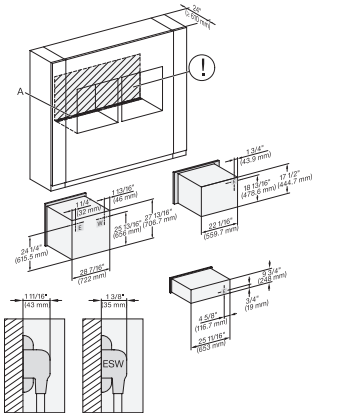

H6x80(2)BP, H6x70BM, ESW6x85, H2x80BP, H7x80BP, Installation Combi wide front side by side, Installation drawing, Proud

A – Cut-out (4" x 28" / 100 mm x 720 mm) in the bottom of the cabinet for power cord and ventilation, – Electrical and water supplies are recommended to be placed in adjacent cabinetry., Additional cabinet depth is required when placing the electrical and water supplies behind the appliance., E = Electric connection

ESW 7670

Handleless Gourmet warming drawer, 30" width and 9 3/16" height for preheating dishware, keeping food warm, and Slow Roasting.

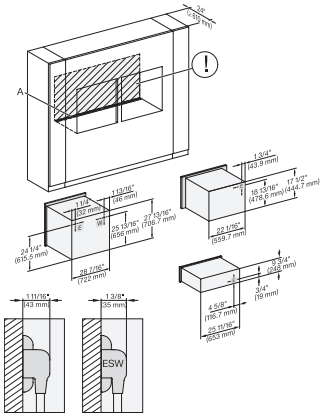

H6x80 BP, H6x70BM, ESW6x85, H6x80-2BP, NA7000, Installation Combi w. front side by side without wall, drawing, Proud, NA

A – Cut-out (4" x 28" / 100 mm x 720 mm) in the bottom of the cabinet for power cord and ventilation, – Electrical and water supplies are recommended to be placed in adjacent cabinetry., Additional cabinet depth is required when placing the electrical and water supplies behind the appliance., E = Electric connection

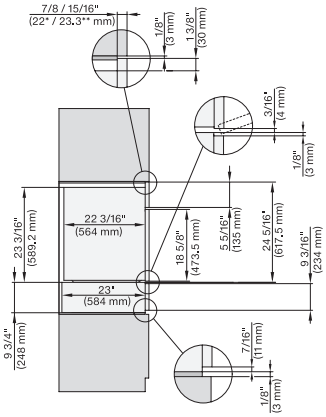

DGC7x8x, ESW7x70, EVS7670, side view, 30 Zoll, Flush inset, combi, XXL

7/8“ – 22* mm – Glass, 15/16“ – 23.3** mm – Stainless steel

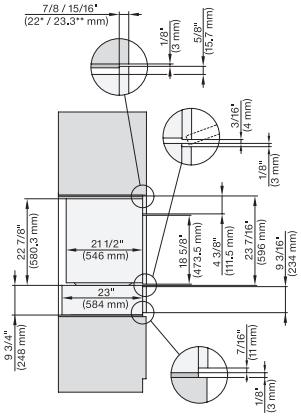

H7x6xBP+EBA7848, ESW7570, EVS7670, side view, 30 Zoll, Flush inset, combi, 650S, ESW

7/8“ – 22* mm – Glass, 15/16“ – 23.3** mm – Stainless steel

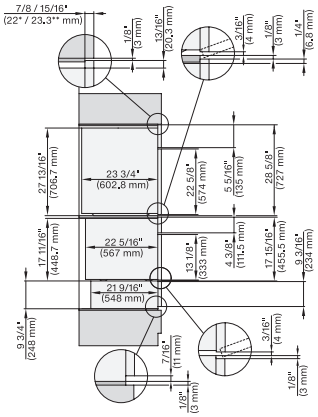

DGC7x4x+EBA7848, H2x80BP, H7x8xBP(X), ESW7x70, EVS7670, side view, 30 Zoll, Flush inset, combi, XL, 650

7/8“ – 22* mm – Glass, 15/16“ – 23.3** mm – Stainless steel

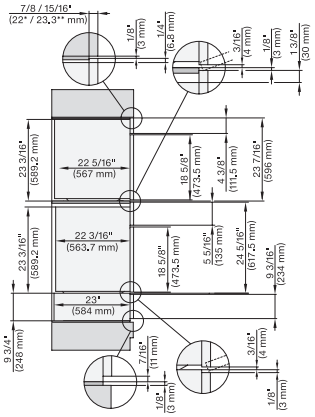

DGC786x+EBA7868, DGC7x8x, ESW7x70, EVS7670, side view, 30 Zoll, Flush inset, combi, XXL

7/8“ – 22* mm – Glass, 15/16“ – 23.3** mm – Stainless steel

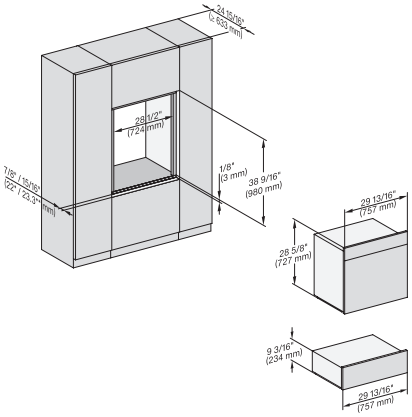

DGC676x+EBA6808, ESW7x70, EVS7670, Einbau, 30 Zoll, Flush inset, combi, XXL

7/8“ – 22* mm – Glass, 15/16“ – 23.3** mm – Stainless steel

ESW 7670

Handleless Gourmet warming drawer, 30" width and 9 3/16" height for preheating dishware, keeping food warm, and Slow Roasting.

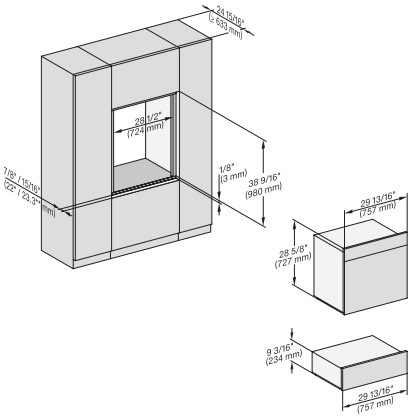

DC7x8x, ESW7x70, EVS7670 Einbau, 30 Zoll, Flush inset, combi, XXL,

7/8“ – 22* mm – Glass, 15/16“ – 23.3** mm – Stainless steel

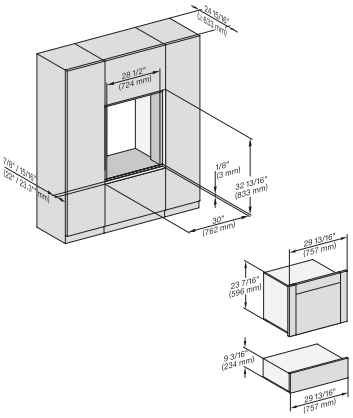

DGC786x+EBA7868, H7x6xBP+EBA7848, ESW7x70, EVS7670, Einbau, 30 Zoll, Flush inset, combi, 650S

7/8“ – 22* mm – Glass, 15/16“ – 23.3** mm – Stainless steel

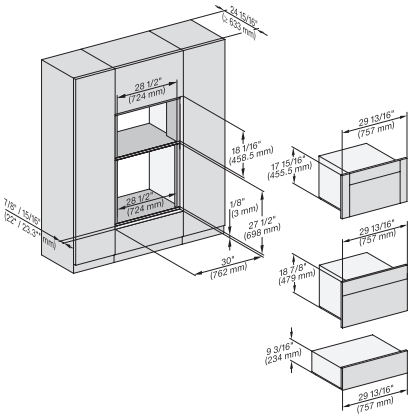

DGC7x4x+EBA7848, H7x70BM(X), ESW7x70, EVS7670, Einbau, 30 Zoll, Flush inset, combi, XL

7/8“ – 22* mm – Glass, 15/16“ – 23.3** mm – Stainless steel

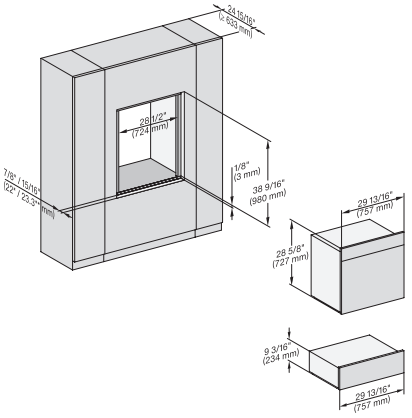

DGC7x8x, ESW7x70, EVS7670, Einbau, 30 Zoll, Flush inset, combi, wide front, XXL

7/8“ – 22* mm – Glass, 15/16“ – 23.3** mm – Stainless steel

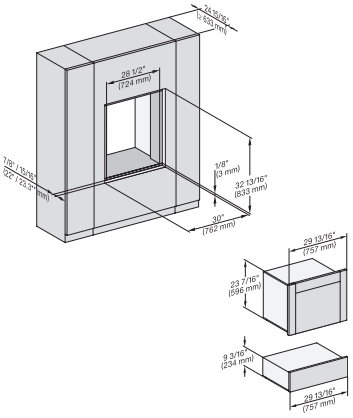

DGC786x+EBA7868, H7x6xBP+EBA7848, ESW7x70, EVS7670, Einbau, 30 Zoll, Flush inset, combi, wide front, 650S

7/8“ – 22* mm – Glass, 15/16“ – 23.3** mm – Stainless steel

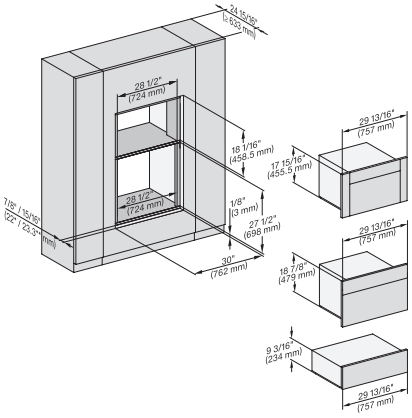

DGC7xxx+EBA7848, H7x70BM(X), ESW7x70, EVS7x70, Einbau, 30 Zoll, Flush inset, combi, wide front, XL

7/8“ – 22* mm – Glass, 15/16“ – 23.3** mm – Stainless steel

ESW 7670

Handleless Gourmet warming drawer, 30" width and 9 3/16" height for preheating dishware, keeping food warm, and Slow Roasting.

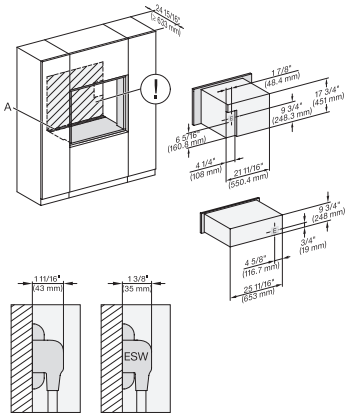

DGC7x4x+EBA7848, ESW7x70, EVS7670, Installation, 30 Zoll, Flush inset, combi, XL

A – Cut-out (4" x 28" / 100 mm x 720 mm) in the bottom of the cabinet for power cord and ventilation, – Electrical and water supplies are recommended to be placed in adjacent cabinetry., Additional cabinet depth is required when placing the electrical and water supplies behind the appliance., E = Electric connection

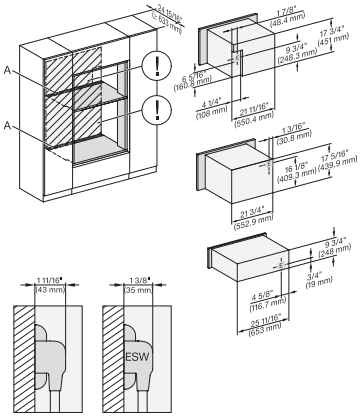

DGC7x4x+EBA7848, H7x40BM+EBA7848, ESW7x70 EVS7670, Installation, 30 Zoll, Flush inset, combi, XL, 450S

A – Cut-out (4" x 28" / 100 mm x 720 mm) in the bottom of the cabinet for power cord and ventilation, – Electrical and water supplies are recommended to be placed in adjacent cabinetry., Additional cabinet depth is required when placing the electrical and water supplies behind the appliance., E = Electric connection

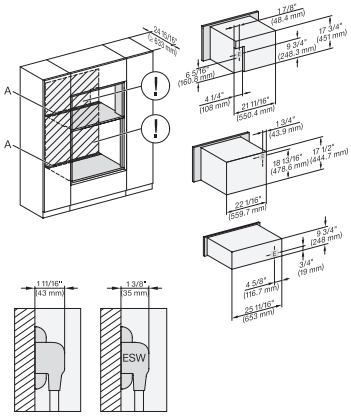

DGC7x4x+EBA7848, H7x70BM+EBA7848, ESW7x70 EVS7670, Installation, 30 Zoll, Flush inset, combi, XL, 450S

A – Cut-out (4" x 28" / 100 mm x 720 mm) in the bottom of the cabinet for power cord and ventilation, – Electrical and water supplies are recommended to be placed in adjacent cabinetry., Additional cabinet depth is required when placing the electrical and water supplies behind the appliance., E = Electric connection

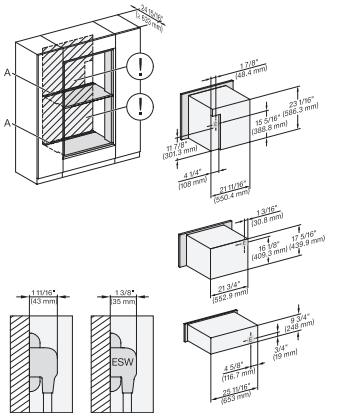

DGC786x+EBA7868, H7x40BM+EBA7848, ESW7x70, EVS7670, Installation, 30 Zoll, Flush inset, combi, XXL, 450S

A – Cut-out (4" x 28" / 100 mm x 720 mm) in the bottom of the cabinet for power cord and ventilation, – Electrical and water supplies are recommended to be placed in adjacent cabinetry., Additional cabinet depth is required when placing the electrical and water supplies behind the appliance., E = Electric connection

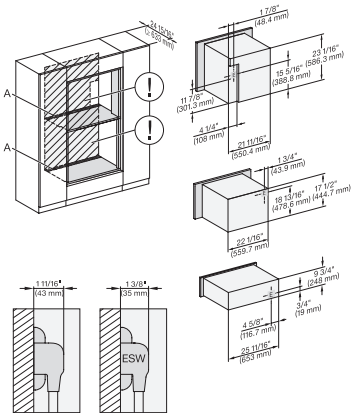

DGC786x+EBA7868, H7x70BM(X), ESW7x70, EVS7670, Installation, 30 Zoll, Flush inset, combi, XXL

A – Cut-out (4" x 28" / 100 mm x 720 mm) in the bottom of the cabinet for power cord and ventilation, – Electrical and water supplies are recommended to be placed in adjacent cabinetry., Additional cabinet depth is required when placing the electrical and water supplies behind the appliance., E = Electric connection

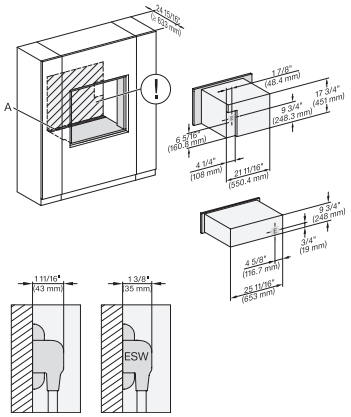

DGC7x4x+EBA7848, ESW7x70, EVS7x70, Installation, 30 Zoll, Flush inset, combi, wide front, XL

A – Cut-out (4" x 28" / 100 mm x 720 mm) in the bottom of the cabinet for power cord and ventilation, – Electrical and water supplies are recommended to be placed in adjacent cabinetry., Additional cabinet depth is required when placing the electrical and water supplies behind the appliance., E = Electric connection

ESW 7670

Handleless Gourmet warming drawer, 30" width and 9 3/16" height for preheating dishware, keeping food warm, and Slow Roasting.

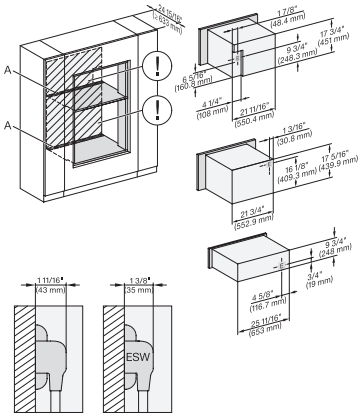

DGC7x40+EBA7848, H7x40BM+EBA7848, ESW7x70, EVS7670, Installation, 30 Zoll, Flush inset, combi, wide front,XL, 450 S

A – Cut-out (4" x 28" / 100 mm x 720 mm) in the bottom of the cabinet for power cord and ventilation, – Electrical and water supplies are recommended to be placed in adjacent cabinetry., Additional cabinet depth is required when placing the electrical and water supplies behind the appliance., E = Electric connection

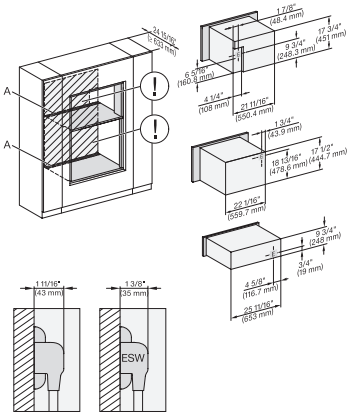

DGC7x40+EBA7848, H7x70BM, ESW7x70, EVS7670, Installation, 30 Zoll, Flush inset, combi, wide front, XL

A – Cut-out (4" x 28" / 100 mm x 720 mm) in the bottom of the cabinet for power cord and ventilation, – Electrical and water supplies are recommended to be placed in adjacent cabinetry., Additional cabinet depth is required when placing the electrical and water supplies behind the appliance., E = Electric connection

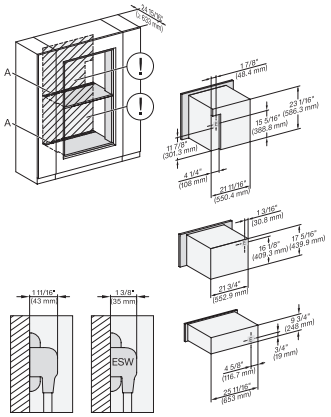

DGC786x+EBA7868, H7x40BM+EBA7848, ESW7x70, EVS7670, Installation, 30 Zoll, Flush inset, combi, wide front, XXL, 450S

A – Cut-out (4" x 28" / 100 mm x 720 mm) in the bottom of the cabinet for power cord and ventilation, – Electrical and water supplies are recommended to be placed in adjacent cabinetry., Additional cabinet depth is required when placing the electrical and water supplies behind the appliance., E = Electric connection

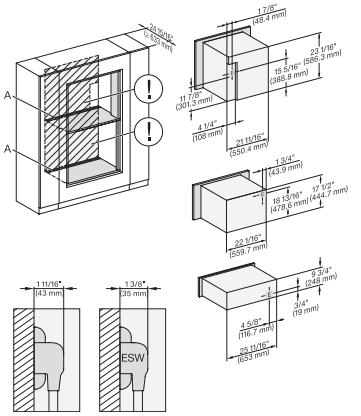

DGC786x+EBA7868, H7x70BM, ESW7x70, EVS7670, Installation, 30 Zoll, Flush inset, combi, wide front, XXL

A – Cut-out (4" x 28" / 100 mm x 720 mm) in the bottom of the cabinet for power cord and ventilation, – Electrical and water supplies are recommended to be placed in adjacent cabinetry., Additional cabinet depth is required when placing the electrical and water supplies behind the appliance., E = Electric connection

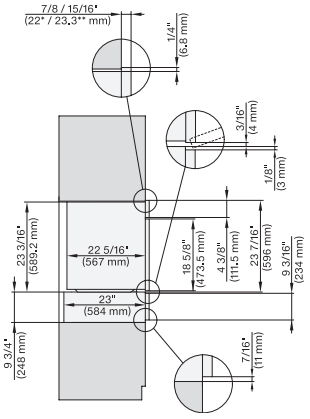

DGC786x+EBA7868, ESW7x70, EVS7670, side view, 30Zoll, Proud, combi, XXL

7/8" – 22* mm – Glass, 15/16" – 23.3** mm – Stainless steel

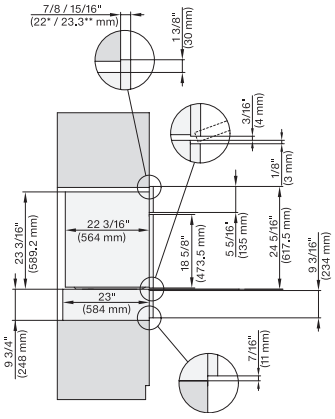

DGC7x8x, ESW7x70, EVS7670, side view, 30 Zoll. Proud, combi, XXL

7/8" – 22* mm – Glass, 15/16" – 23.3** mm – Stainless steel

ESW 7670

Handleless Gourmet warming drawer, 30" width and 9 3/16" height for preheating dishware, keeping food warm, and Slow Roasting.

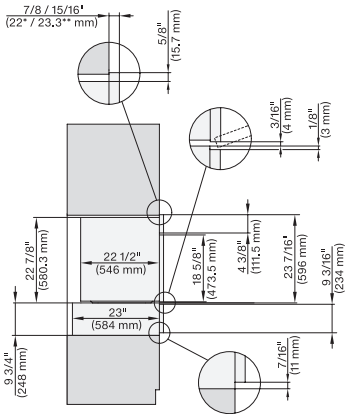

H7x6xBP+EBA7848, ESW7x70, EVS7670, side view, 30 Zoll, Proud, combi, 650S

7/8“ – 22* mm – Glass, 15/16“ – 23.3** mm – Stainless steel

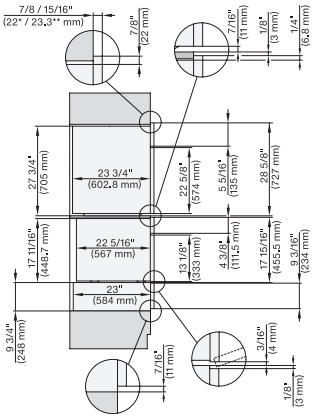

DGC7x4x+EBA7848, H7x80BP, H7x8xBP(X), ESW7x70, EVS7670, side view, 30 Zoll, Proud, combi, XL, 650

7/8“ – 22* mm – Glass, 15/16“ – 23.3** mm – Stainless steel

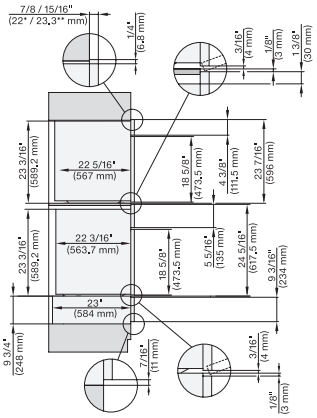

DGC786x+EBA7868, DGC7x8x, ESW7x70, EVS7670, side view, 30 Zoll, Proud, combi, XXL

7/8“ – 22* mm – Glass, 15/16“ – 23.3** mm – Stainless steel

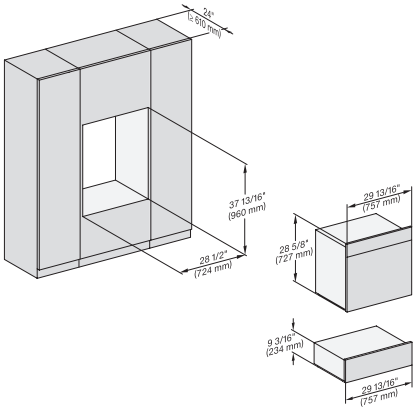

DGC7x8x, ESW7x70, EVS7670, Einbau, 30 Zoll, Proud, combi, XXL

7/8“ – 22* mm – Glass, 15/16“ – 23.3** mm – Stainless steel

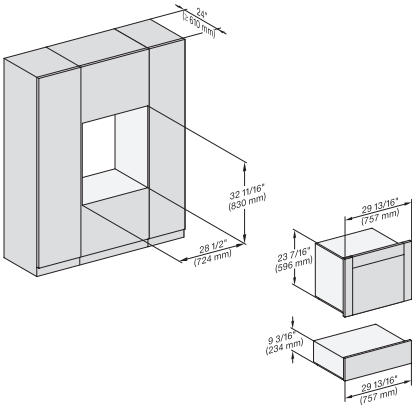

DGC786x+EBA7868, H7x6xBP+EBA7848, ESW7x70, EVS7670, Einbau 30 Zoll, Proud, combi, 650S

7/8“ – 22* mm – Glass, 15/16“ – 23.3** mm – Stainless steel

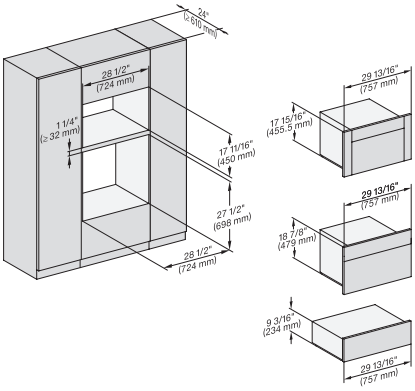

DGC7x4x+EBA7848, H7x70BM(X), ESW7x70, EVS7670, Einbau, 30 Zoll, Proud, combi, XL

7/8“ – 22* mm – Glass, 15/16“ – 23.3** mm – Stainless steel

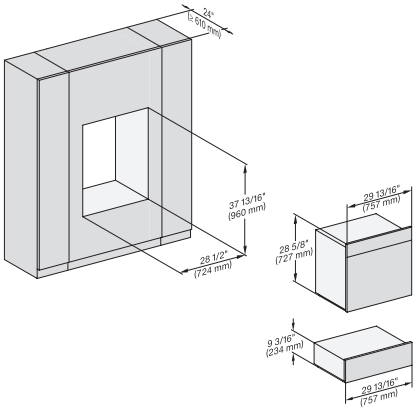

DGX7x8x, ESW7x70, EVS7670, Einbau, 30 Zoll, Proud, combi, wide front, XXL

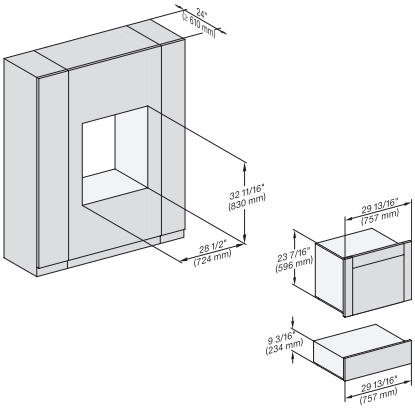

DGC786x+EBA7868, H7x6xBP+EBA7848, ESW7x70, EVS7670, Einbau 30 Zoll, Proud, combi, wide front, 650S

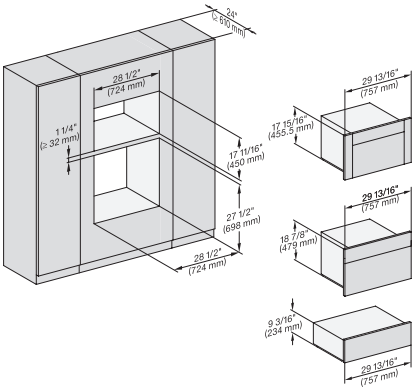

DGC7x4x+EBA7848, H7x70BM(X), ESW7x70, EVS7670, Einbau, 30 Zoll, Proud, combi, wide front, XL

ESW 7670

Handleless Gourmet warming drawer, 30" width and 9 3/16" height for preheating dishware, keeping food warm, and Slow Roasting.

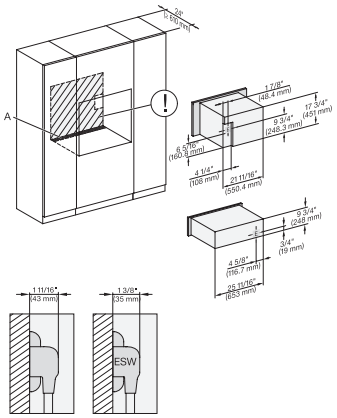

DGC7x4x+EBA7848, ESW7x70, EVS7670, Installation, 30 Zoll, Proud, combi, XL,

A – Cut-out (4" x 28" / 100 mm x 720 mm) in the bottom of the cabinet for power cord and ventilation, – Electrical and water supplies are recommended to be placed in adjacent cabinetry., Additional cabinet depth is required when placing the electrical and water supplies behind the appliance., E = Electric connection

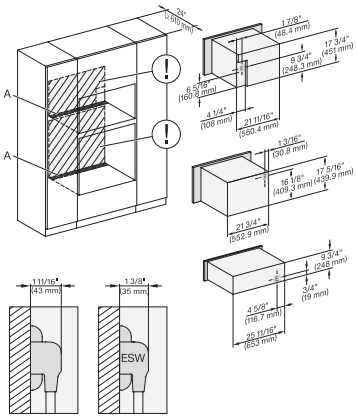

DGC7x4x+EBA7848, H7x40BM+EBA7848, ESW7x70, Installation, 30 Zoll, Proud, Flush inset, combi, XL, 450S

A – Cut-out (4" x 28" / 100 mm x 720 mm) in the bottom of the cabinet for power cord and ventilation, – Electrical and water supplies are recommended to be placed in adjacent cabinetry., Additional cabinet depth is required when placing the electrical and water supplies behind the appliance., E = Electric connection

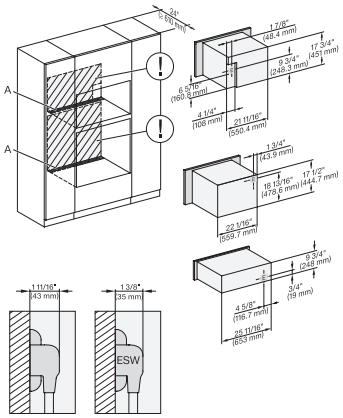

DGC7x4x+EBA7848, H7x70BMX, ESW7x70, EVS7670, Installation, 30 Zoll, Proud, combi, XL

A – Cut-out (4" x 28" / 100 mm x 720 mm) in the bottom of the cabinet for power cord and ventilation, – Electrical and water supplies are recommended to be placed in adjacent cabinetry., Additional cabinet depth is required when placing the electrical and water supplies behind the appliance., E = Electric connection

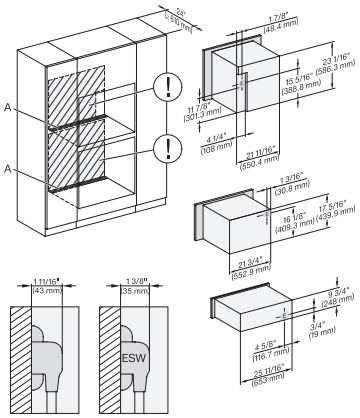

DGC786x+EBA7868, H7x4xBM + EBA7848, ESW7x70, EVS7670, Installation, 30 Zoll, Proud, combi, XXL, 450S

A – Cut-out (4" x 28" / 100 mm x 720 mm) in the bottom of the cabinet for power cord and ventilation, – Electrical and water supplies are recommended to be placed in adjacent cabinetry., Additional cabinet depth is required when placing the electrical and water supplies behind the appliance., E = Electric connection

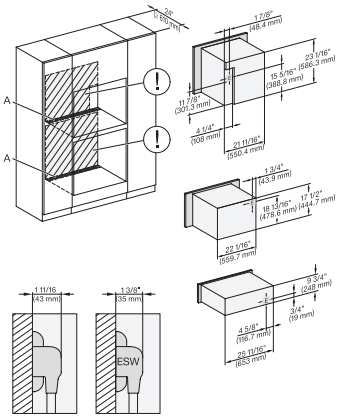

DGC786x+EBA7868, H7x70BM(X), ESW7x70, EVS7670, 30 Zoll, Proud, combi, XXL

A – Cut-out (4" x 28" / 100 mm x 720 mm) in the bottom of the cabinet for power cord and ventilation, – Electrical and water supplies are recommended to be placed in adjacent cabinetry., Additional cabinet depth is required when placing the electrical and water supplies behind the appliance., E = Electric connection

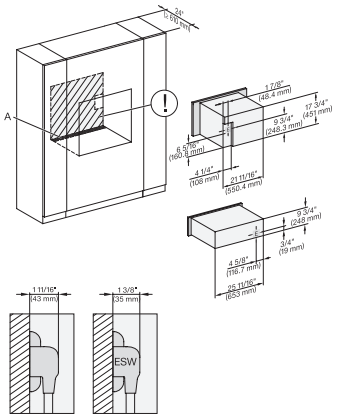

DGC7x4x+EBA7848, ESW7x70, EVS7670, Installation, 30 Zoll, Proud, combi, wide front, XL

A – Cut-out (4" x 28" / 100 mm x 720 mm) in the bottom of the cabinet for power cord and ventilation, – Electrical and water supplies are recommended to be placed in adjacent cabinetry., Additional cabinet depth is required when placing the electrical and water supplies behind the appliance., E = Electric connection

ESW 7670

Handleless Gourmet warming drawer, 30" width and 9 3/16" height for preheating dishware, keeping food warm, and Slow Roasting.

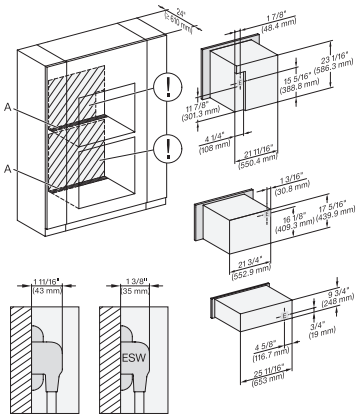

DGC768x+EBA7848, H7x40BM+EBA7848, ESW7x70, EVS7670, Installation, 30 Zoll, Proud, combi, wide front, XXL, 450S

A – Cut-out (4" x 28" / 100 mm x 720 mm) in the bottom of the cabinet for power cord and ventilation, – Electrical and water supplies are recommended to be placed in adjacent cabinetry., Additional cabinet depth is required when placing the electrical and water supplies behind the appliance., E = Electric connection

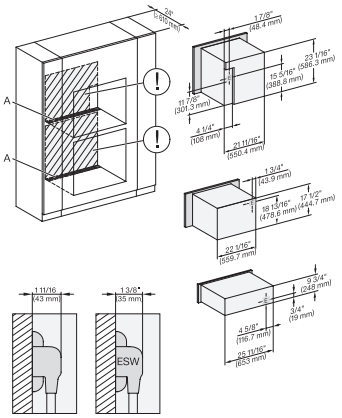

DGC786x+EBA7868, H7x70BM(X), ESW7x70, EVS7670, Installation, 30 Zoll, Flush inset, combi, wide front, XXL

A – Cut-out (4" x 28" / 100 mm x 720 mm) in the bottom of the cabinet for power cord and ventilation, – Electrical and water supplies are recommended to be placed in adjacent cabinetry., Additional cabinet depth is required when placing the electrical and water supplies behind the appliance., E = Electric connection